Service Door (Insulated and Non-Insulated) Installation Instructions

Shawn Kelley

Digitally signed by Shawn Kelley
Date: 2025.12.15 11:09:06 -05'00'

SHAWN PATRICK KELLEY
LICENSE
No 58299
STATE OF FLORIDA
PROFESSIONAL ENGINEER

ECO# 2263 REVISION# 004 **ES 10-476 DATE 07/21/2023**

Section 1 – Table of Contents

Section 2 – Safety Check List	**2**
Section 3 – Freight Receiving	**3**
Section 4 – Pre-installation	**4**
Section 5 – Guides	**5**
Face-Of-Wall	**5**
Between Jambs	**9**
Section 6 – Barrel and Brackets	**19**
Preparation	**19**
Ring Attachment	**20**
Bracket Preparation	**22**
Hoisting and Installing Barrel Assembly	**22**
Section 7 – Motor Operator Installation	**24**
Section 8 – Curtain Installation	**25**
Applying Spring Turns	**26**
Section 9 – Lintel Seal	**28**
Z Shape	**28**
L Shape	**29**
Section 10 – Hood, Fascia, and Covers	**30**
Hood Support Installation	**30**
Hood and Fascia Installation	**32**
Section 11 – Torque Specifications	**35**
Section 12 – Maintenance Schedule	**36**
Appendix A – Chain Sprocket Adjustor	**39**
Appendix B – Vinyl Guide Weather Seal	**40**

Section 2 – Safety Check List

Rolling doors are large, movable objects. They move with the help of electric motors or manual operators (chain, crank, push up, etc), and most have springs under high tension. These items and their components can cause injury. In order to avoid injury to yourself and others, please follow the instructions in this manual.

- **Review the potential hazards and preventative measures listed below:**

Table 2.1 - Potential Hazards and Preventative Measures

Potential Hazard		Preventative Measure
	DANGER **Pinned or crushed by closing door.**	• Keep yourself and others clear of opening while door is in motion. • Do not allow children to play near or operate door. • Do not operate if door becomes jammed or broken.
	WARNING **Struck by adjusting wheel bar while applying spring turns.**	• Be sure bar is adequate in strength and long enough to allow installer to apply the necessary torque. • Make sure bar is fully seated into the adjusting wheel slot before applying pressure. • Use two bars while applying turns to the adjusting wheel.
	WARNING **Electrical shock.**	• Make sure electrical operator is properly grounded. • Turn off source power completely prior to servicing the motor. • Make sure wires are clear of any moving or potentially moving parts. • Avoid pinching wires when installing the motor cover.
	WARNING **Pinched by moving components.**	• Make sure the motor is turned off and unplugged before working with moving parts such as roller chain and sprockets, drop-out mechanisms, adjusting wheels, etc. • Locate the possible pinch-points of the unit (Drive chain, coil area, bottom bar, etc.) Do not operate the door while someone is near these areas.

- **Check the following during installation and before leaving the job site:**
  a. If the unit has tension springs, be sure the proper amount of tension is applied to the torsion springs, in order to properly counterbalance the weight of the curtain.
  b. Securely fasten the tension adjusting wheel in place with the appropriate hardware provided.
  c. Check that the keys and/or cotter pins have been set in place and fit properly at all sprockets or gears.
  d. Check that the setscrews in each sprocket or gear (one over the key and one offset from the key) have been tightened properly.
  e. Check all fasteners holding the unit to the building structures.
  f. Check all fasteners used to assemble the components of the unit together.
  g. Instruct owner or representative in the proper method of operating the door.

Section 3 – Freight Receiving

- **Upon delivery, check condition of components for damage.**

- **If damage occurred in transit, the installation should not proceed without authorization.**

NOTICE

If the installation proceeds, neither the carrier nor the manufacturer will assume responsibility for replacing the damaged material.

- **If the installation is stopped due to damage, do the following:**
  1. Take pictures of the damage.
  2. Do not move material from point of delivery to other premises once the damaged components are discovered.
  3. Do not unpack, if the damage is visible prior to removing packaging, until an inspection is made.
  4. If the damage is found while removing contents from packaging, the packaging material must be saved until inspection is made.
  5. Container and packaging should be retained by consignee until inspection is made.
  6. Have components inspected by carrier's representative within 15 days from date of delivery.
  7. Consignee must obtain a copy of the Inspection Report.

- **Returning damaged components:**
  1. Obtain permission from carrier to return.
  2. Route the return shipment via the identical carrier(s) involved in the original shipment.
  3. Notify the manufacturer when shipment is returned to manufacture plant.

- **Verify that all components have arrived. Look for the following:**
  1. Job construction drawings featuring different views (elevation, section, plan, etc.)
  2. (2) Guide assemblies; check for guide weathering if included in order
  3. Barrel assembly
  4. Curtain assembly with bottom bar attached
  5. (2) Bracket assemblies
  6. Operator; if not attached to bracket
  7. Operator cover; may not be included in order
  8. Adjusting wheel; if the barrel assembly contains springs
  9. Inertia brake; typically on units with springless barrel assemblies
  10. Hood and hood supports; may not be included in order
  11. Hardware
  12. Misc. items (Reelite, lintel seal, hood baffle, etc.)
  13. Verify material/finish/color of components matches what is listed on the job construction drawings and/or what was ordered.

- **If the delivery is incomplete:**
  1. Make note on delivery receipt.
  2. Note should be verified by driver's signature.
  3. Notify carrier and manufacturer.

Section 4 – Pre-installation

- **Read entire instruction manual thoroughly. The manufacturer will not be held responsible for any charges incurred due to improperly installed components.**
  a. Only trained door systems technicians should perform installation, maintenance, etc.
  b. Each unit comes with an individual item number. If the job contains multiple units, be sure to locate all the components for each item and separate each.

WARNING

Do not interchange parts from one door to another.

  c. Find the job construction drawings for the unit being installed and check the dimensions of the opening against those on the drawings. See ***Figure 4.1*** below.
  d. If the opening dimensions differ from those on the drawings, **do not proceed,** check with distributor/manufacturer to be sure the correct door is being installed.
  e. Check the jambs of the opening for plumb. Check the head/lintel and floor for level. If the unit is to be free standing, for example mounted to tubes, check the floor and ceiling for level and for adequate mounting areas at the top and bottom.
  f. If your guides are embedded please contact the Service Department at 1-800-233-8366 for additional warning labels to be applied to finished wall. Ask for "Safety Instruction Labels.".

  Note*: The floor may not be level if a pitched bottom bar is specified.*

- **Work Area:**
  a. The key to a smooth installation is a clean and well-prepared work environment. Once the components have been inspected and the job construction drawings have been reviewed; lay out the components in the order of installation.
  b. The opening for the door should be cleaned and inspected for rough surfaces and construction debris.
  c. Lastly the mounting hardware supplied with the door should correspond with the surface and construction features of the opening.
  d. The basic assembly sequence is as follows: guides, barrel w/ rings or tapped holes, brackets, motor operator (if applicable), curtain, bellmouth, stoppers, weather stripping, hood, and operator/adjustor/idler covers.

Figure 4.1 - Opening Dimensions and Designations

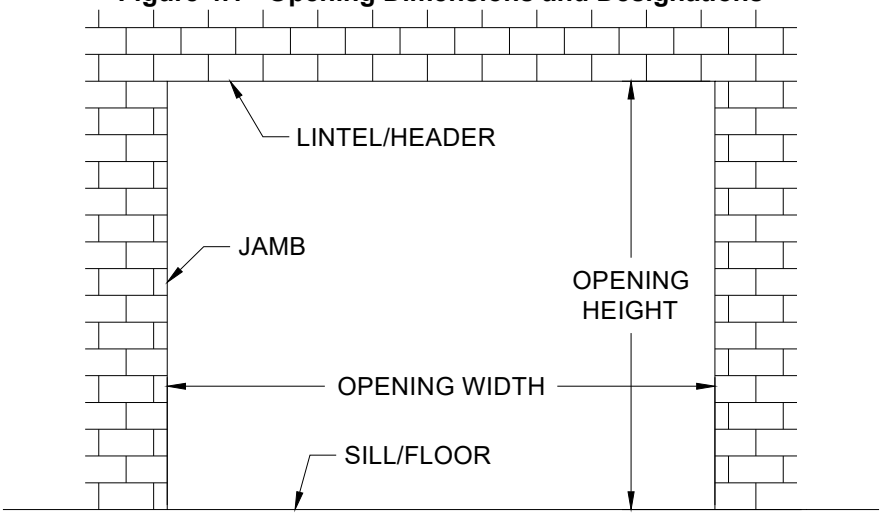

- **Face of Wall Units (Figures 5.1 - 5.5):**

  Note: *Determine which guide assemblies are utilized on the unit from the job construction drawings and compare to the diagrams below.*[1]

Figure 5.1 – Face of Wall "Z" Guide

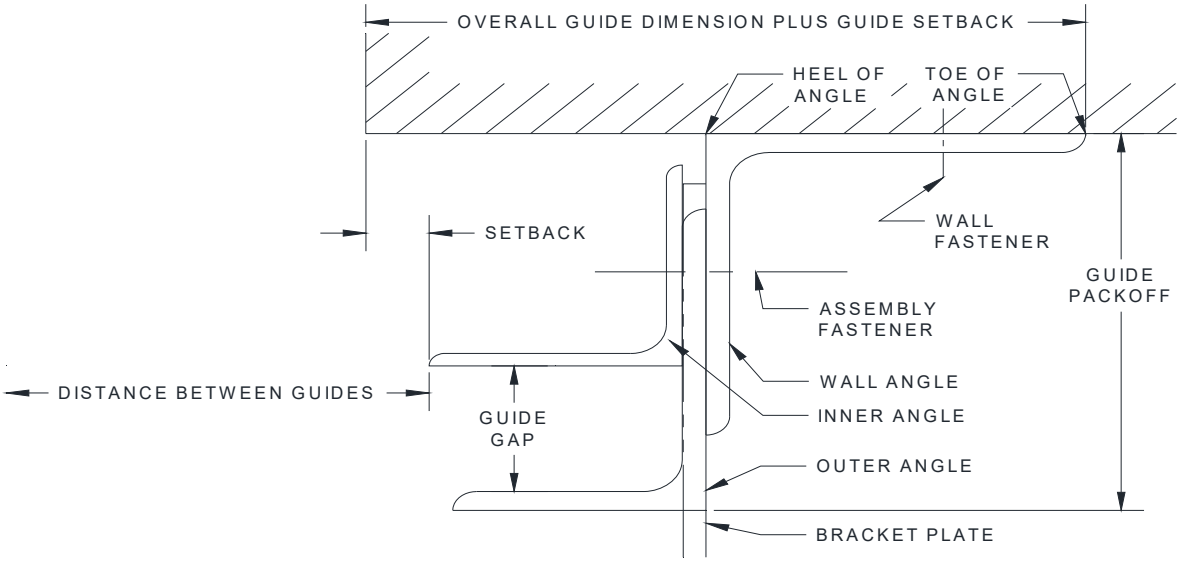

Figure 5.2 – Face of Wall "Z" Guide with Windlock Flat

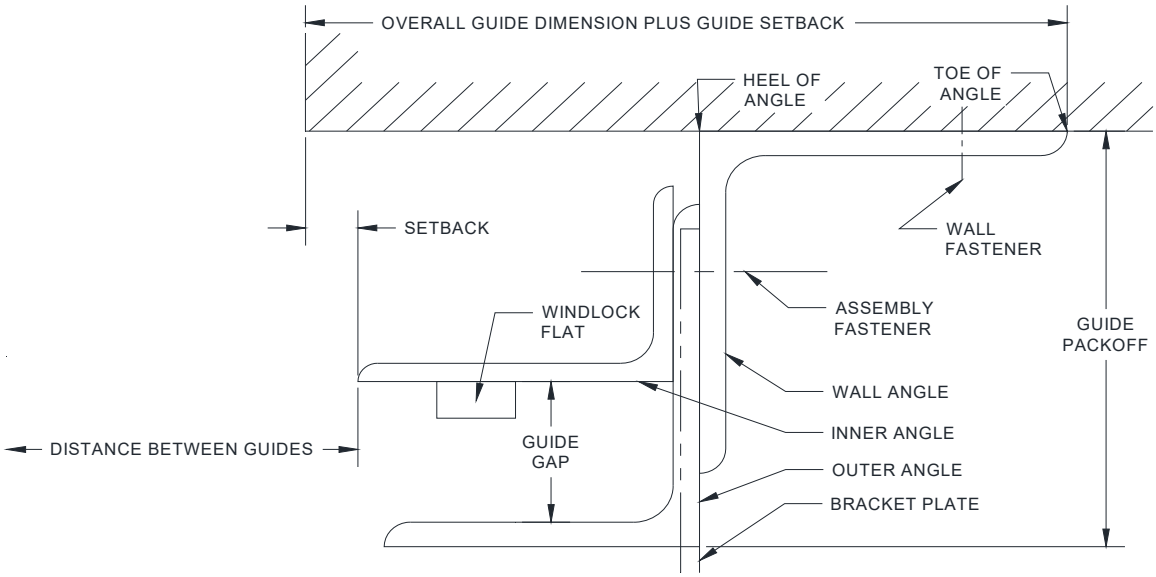

[1] The guide assembly may differ from the right to left hand side of the unit. In these cases, follow the directions for each particular guide assembly, as well as the job construction drawings provided with the unit.

Figure 5.3 – Face of Wall "Z" Guide (with Formed Stainless Steel[2] Angles & Brush Seal)

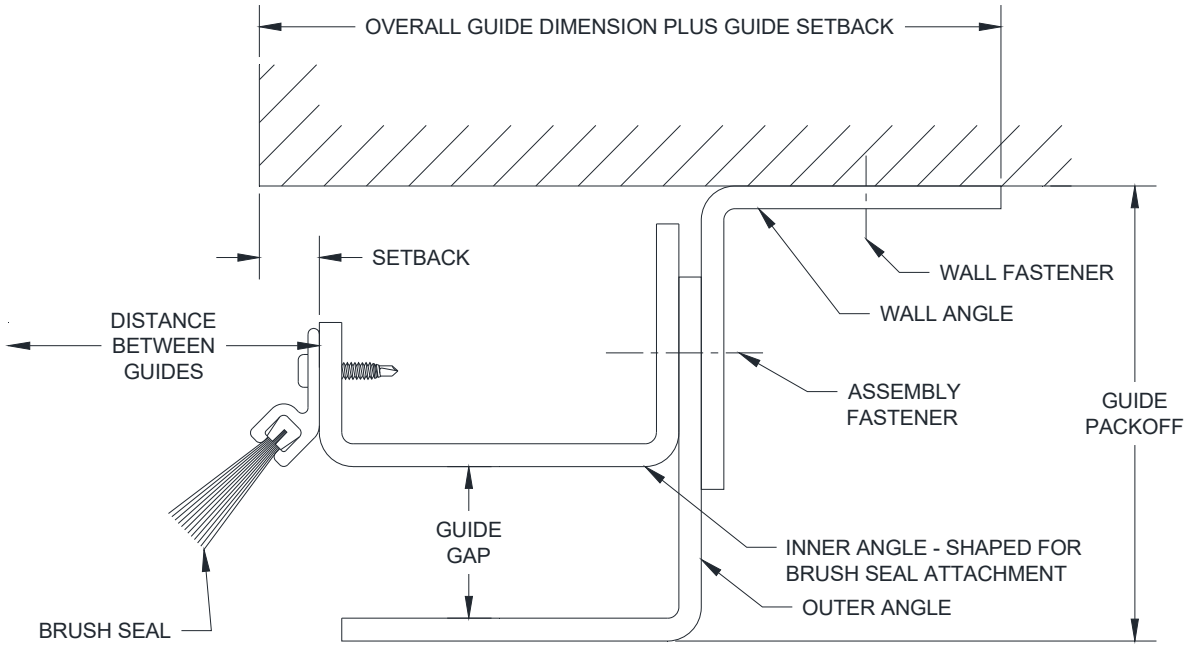

Figure 5.4 – Face of Wall "E" Guide

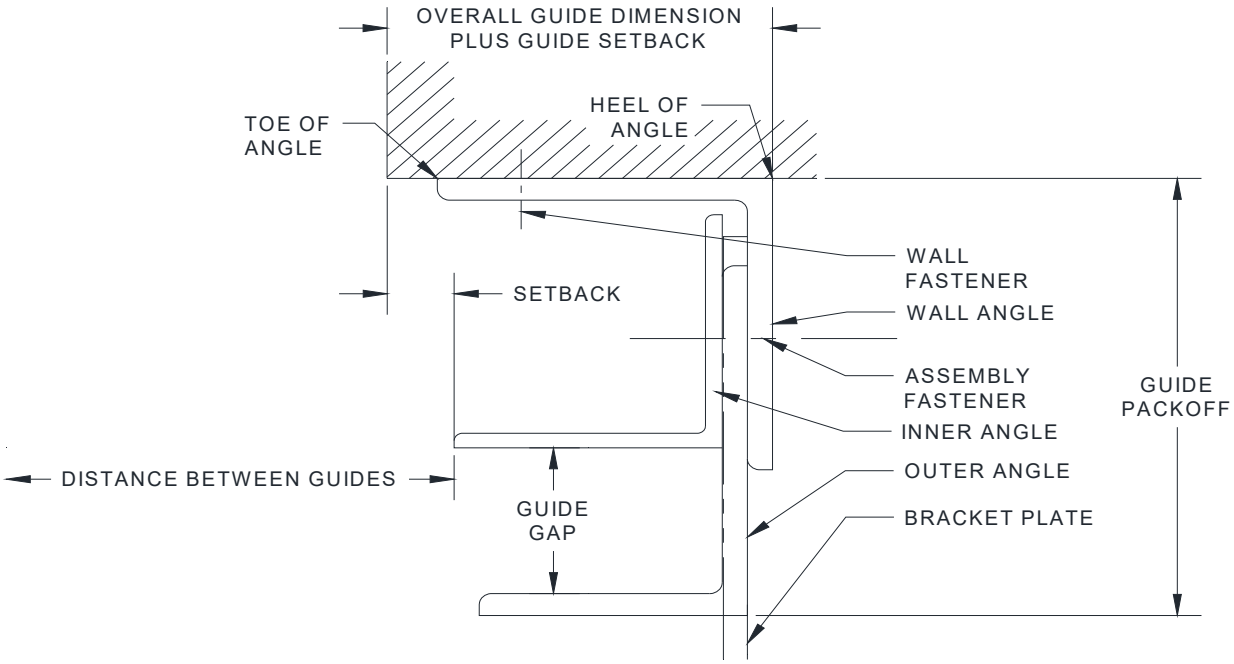

Figure 5.5 – Face of Wall "E" Guide with Windlock Flat

[2] Formed stainless steel guide assemblies have the same basic dimensions as structural steel guide assemblies shown.

Section 5 – Guides

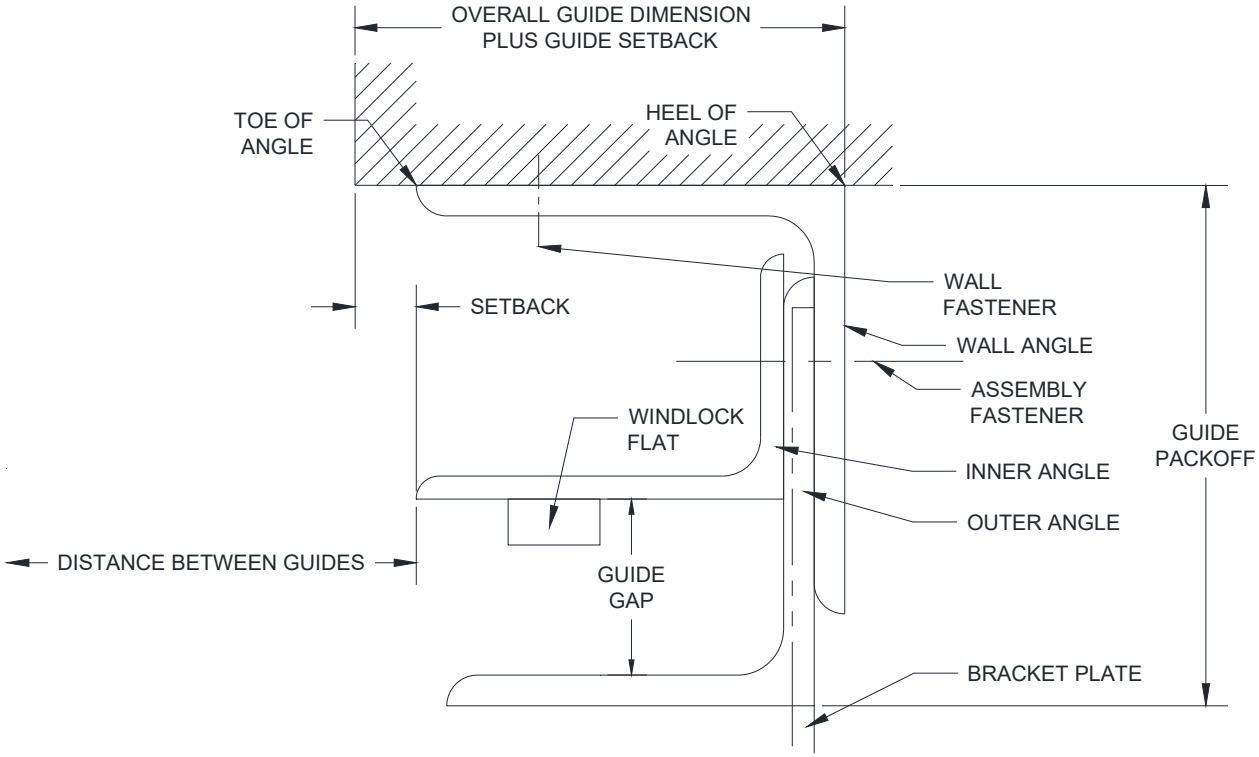

Section 5 – Guides

1. Remove the bellmouth from the guide by removing the bolts that anchor the bellmouth to the wall angle. Loosen the first bolt closest to the bellmouth on the guide.
2. Certain guide assemblies may have to be disassembled in order to mark the location of the wall fastener mounting holes, and in order to fasten to wall. [3]
   - "Z" guides, with or without windlock flat, may **not** have to be disassembled to install.
   - "E" guides, with or without windlock flat, must be disassembled in order to install the wall angle.
3. Measure the distance from the opening/jamb to the heel of the wall angle (on "E" guides) or the toe of the wall angle (on "Z" guides). This distance is referred to as the "*Overall Guide Dimension plus Guide Setback";* see ***Figures 5.1 - 5.5***. See the job construction drawings for the dimensions.
4. Place mark on the floor at measured location. Check the distance between these marks and compare with the job construction drawing. It will be the "*Distance Between Guides*" plus the "*Overall Guide Dimension plus Guide Setback*" at both jambs.

NOTICE

If the measurement does not equal the dimensions on the job construction drawings, **STOP**. Check the guide dimensions against those on the job construction drawings to be sure the correct guides are being installed. If so, repeat previous step and re-check.

5. Scribe a plumb line on the wall from the marks on the floor.
6. Place the guide or wall angle against the scribed line, check the top of the guide for level, and mark the location of the wall fastener mounting holes.
7. If the guide is attached to the wall with fasteners, drill mounting holes for the wall fasteners and fasten the guides / wall angle with the hardware provided. Check the job construction drawings for the wall fastener required. Tighten the wall fasteners to the recommended installation torque in the *Torque Specifications Tables* in ***Section 11***.
8. If the guide is attached to the wall by welding to structural steel, see the job construction drawings for details on weld location, type, pitch, size, etc.[4]
9. Reassemble inner and outer angles if necessary.
10. Adjust the guide gap if necessary. Guide gap is **critical** and must be verified. Check the job construction drawing to determine what guide gap is required for the unit.
11. Preload the assembly fasteners per the torque recommendations in the *Torque Specifications Tables* in ***Section 11***.
12. If guide brush seal is provided, fasten it to the guide at this time per the guide detail on the job construction drawings.

---

[3] In some cases where there is a mounting member, such as a structural tube (not provided by door manufacturer), the guide may be fastened to the mounting member and then the entire assembly is stood up and installed together. If the guides are too heavy to stand up assembled, they will have to be installed in pieces.
[4] Minimum recommended weld rod: AWS A5.1, Grade E-70.

- **Between Jambs Units Four-Angle Guide (Figures 5.6-5.7):**

  Note: *Determine which guide assemblies are utilized on the unit from the job construction drawings and compare to the diagrams below.*[5]

Figure 5.6 – Between Jambs Four-Angle Guide

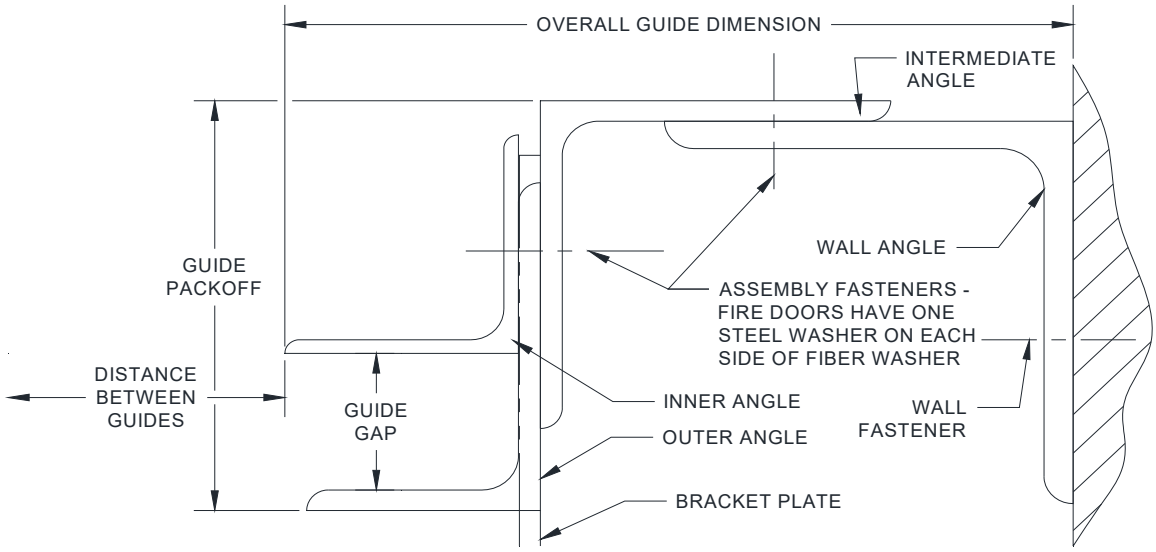

Figure 5.7 – Between Jambs Four-Angle Guide with Windlock Flat (Shown with fascia mounting channel provided for mounting fascia.)

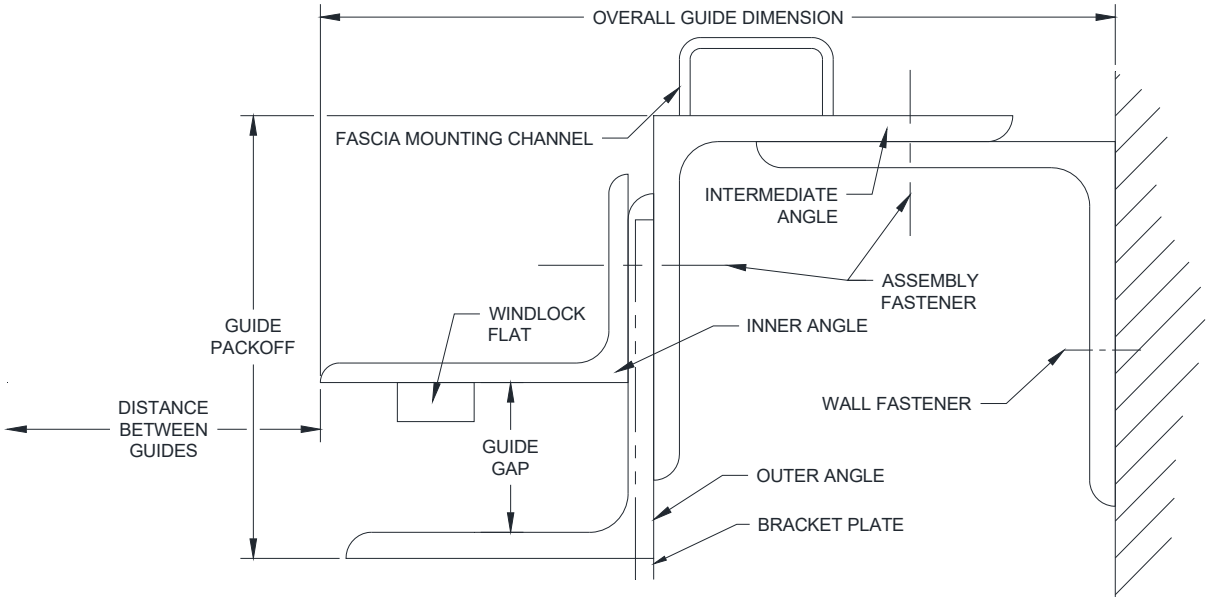

[5] The guide assembly may differ from the right to left hand side of the unit. In these cases, follow the directions for each particular guide assembly, as well as the job construction drawings provided with the unit.

1. Remove the bellmouth from the guide by removing the bolts that anchor the bellmouth to the wall angle. Loosen the first bolt closest to the bellmouth on the guide.
2. Certain guide assemblies may have to be disassembled in order to mark the location of the wall fastener mounting holes, and in order to fasten to the wall. The four angle guide assembly may be too bulky to maneuver or too compact to allow sufficient access for the tool(s) required to apply the necessary torque.[6]
3. Measure the "*Opening Width*", or the distance between jambs, and compare with the job construction drawings provided. If this distance is not equal to the job construction drawing dimension, **do not proceed!!** Be sure the correct unit is being installed. Contact the project manager.
4. Determine where the fascia of the door will be located with respect to the header / lintel (if one exists) and the jamb.
5. If a header/lintel exists, see the elevation view of the job construction drawings to determine if the door is to be placed against the header as shown below. If so, project a plumb line from the header to the floor. Mark the floor at this location.
6. If a header/lintel does not exist, or if the door is not going to be placed against the header/lintel, contact the project manager to determine where the door will be located. Mark the floor at this location and scribe a plumb line up the jambs.

Figure 5.8 - Locating & Marking BJ Four Angle Guide Ass'y

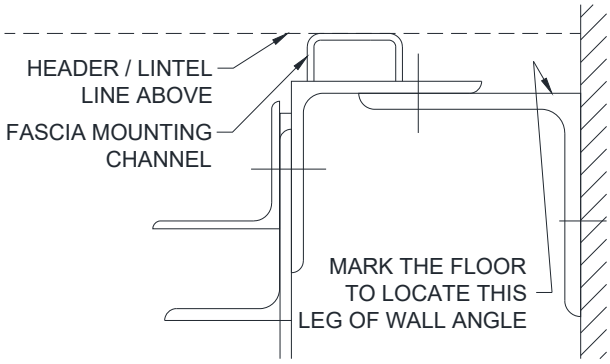

7. Stand the guide/wall angle up to the wall, holding the bottom of the guide on the mark while making the guide plumb. Mark the location of the wall fastener mounting holes.
8. If possible, check the "*Distance between Guides*" [7] dimension at this time.

NOTICE

If the "*Distance between Guides*" dimension does not equal the dimension on the job construction drawings, **STOP**. Check the guide dimensions against those on the job construction drawings to be sure the correct guide is being installed. If so, repeat the previous steps and check the "*Distance Between Guides*" dimension again.

9. If the guide is attached to the wall with fasteners, drill mounting holes for the wall fasteners and fasten the guides / wall angle with the hardware provided. Check the job construction drawings for the wall fastener required. Tighten the wall fasteners to the recommended installation torque in the *Torque Specifications Tables* in ***Section 11***.

---

[6] In some instances where there is a mounting member, such as a structural tube (not provided by door manufacturer), the guide may be fastened to the mounting member and then the entire assembly is stood up and mounted in place together. If the guides are too heavy to stand up fully assembled, the guides will have to be disassembled to be installed.

[7] The "Distance between Guides" dimension may be taken from the tip of the inner or outer angle, depending on which angle extends further into the opening. See the job construction drawing of the guide detail.

10. If the guide is attached to the wall by welding to structural steel, see the job construction drawings for details on weld location, type, pitch, size, etc.[8]
11. Reassemble guides if necessary.
12. Adjust the guide gap if necessary.

NOTICE

Guide gap is **critical** and must be verified. Check the job construction drawing to determine what guide gap is required for the unit.

13. Preload the assembly fasteners per the torque recommendations in the *Torque Specifications Tables in* ***Section 11***.

- **Between Jambs Units Two-Angle Guide with Flat:**

Note: *Determine which guide assemblies are utilized on the unit from the job construction drawings and compare to the diagram below.*

Figure 5.9 – Between Jambs Two-Angle Guide with Flat

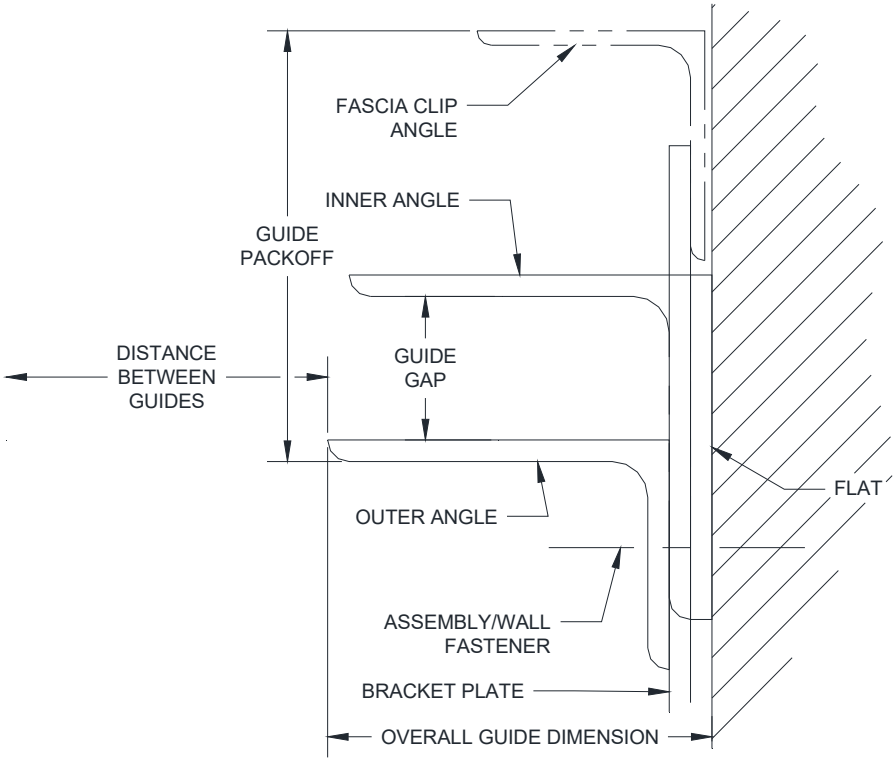

1. Measure the "*Opening Width*" or the distance between jambs. Compare with the job construction drawings provided.

NOTICE

If this distance is not equal to the job construction drawing dimension, **do not proceed!!** Be sure the correct unit is being installed. Contact the project manager.

[8] Minimum recommended weld rod: AWS A5.1, Grade E-70.

2. *Two-Angle Guides with Flats* **cannot** be assembled prior to attachment. Since the wall fastener is also the assembly fastener for this type of guide, the entire assembly will have to be installed at once.
3. Determine where the fascia of the door will be located with respect to the header/lintel (if one exists) and the jamb. See ***Figure 5.10*.**
4. If a header/lintel exists, see the elevation view of the job construction drawings to determine if the door is to be placed against the header. If so, project a plumb line from the header to the floor. Mark the floor at this location.
5. If a header/lintel does **not** exist, or if the door is **not** going to be placed against the header/lintel, contact the project manager to determine where the door will be located. Mark the floor at this location.
6. Hold the flat against the wall at the marked location and make sure it is plumb. Mark the wall fastener hole locations on the wall construction using the flat as a template.
7. Drill holes in the wall construction.
8. Pre-assemble the inner and outer angles with the flat and stand them upright against the wall construction. Fasten the assembly to the wall.
9. Do not attach the bellmouth at this time.

- **Between Jambs Units Two-Angle Guide Mounting to Tubes:**

Note: *Determine which guide assemblies are utilized by the unit from the job construction drawings and compare to the diagram below.*[9]

Figure 5.10 – Between Jambs Two-Angle Guide Mounting to Tubes

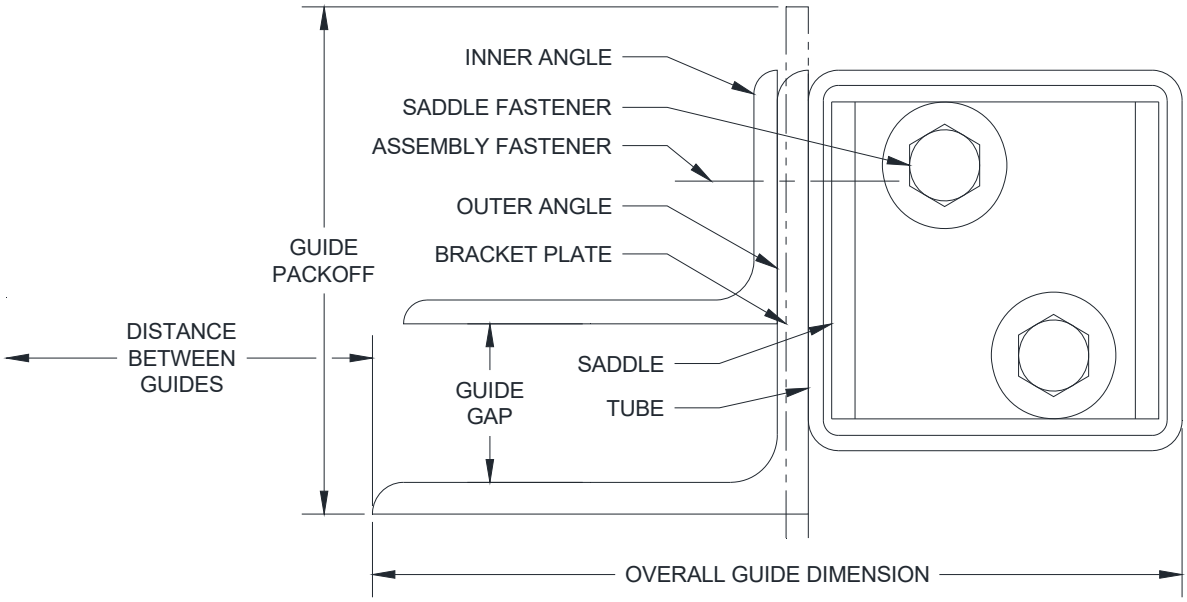

1. Measure the "*Opening Width*", or the distance between jambs. Compare with the job construction drawings provided.

[9] The guide assembly may differ from the right to left hand side of the unit. In these cases, follow the directions for each particular guide assembly, as well as the job construction drawings provided with the unit.

NOTICE

If this distance is not equal to the job construction drawing dimension, **do not proceed!!** Be sure the correct unit is being installed. Contact the project manager.

2. *Two-Angle Guides Mounting to Tubes* are usually supplied with the inner and outer guides already attached, and can usually be installed as one unit. For larger units, installing the tubes with the guides attached may prove difficult. The tubes may need to be installed **without** the inner and outer angles attached. If you feel this is the case, remove the inner and outer angles at this time.
3. Determine where the fascia of the door will be located with respect to the header/lintel (if one exists) and the jamb. In this configuration, the fascia mounts to clip angles located on the front of the bracket. See ***Figure 5.11***.

Figure 5.11 - Fascia Mounting Clip Angle

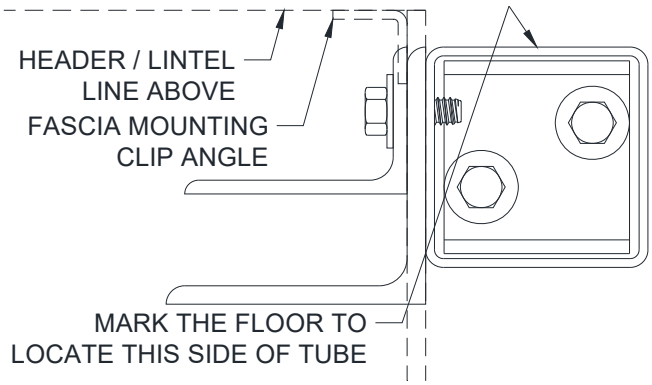

***Note**: If the door has mixed guides (face of wall on one side and between jambs on the other) refer to the job construction drawings to determine how to install the guides so the guide openings are aligned and flush with the fascia.*

4. If a header/lintel exists, see the elevation view of the job construction drawings to determine if the door is to be placed against the header. If so, project a plumb line from the header to the floor. Mark the floor at this location.
5. If a header/lintel does **not** exist, or if the door is **not** going to be placed against the header/lintel, contact the project manager to determine where the door will be located. Mark the floor at this location.
6. Locate the *Tube Saddles* (brackets used to constrain the tube at the bottom). There are two types of saddles: *standard saddles* and *inverted saddles*. Both utilize the same steps for installation. The difference is the mounting flange.

   ***Note:** If bottom bar locking is provided, be sure to orient the saddles as not to interfere with the throw of the slide bolt. See **Figure 5.13**.*

Figure 5.12 – Tube Saddles

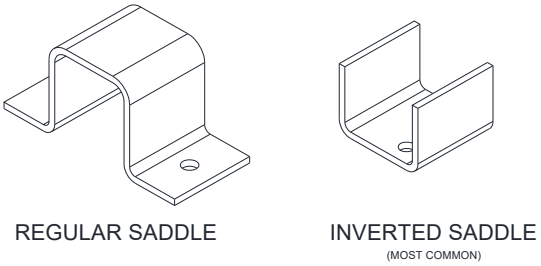

Figure 5.13 – Tube Saddle Hole location

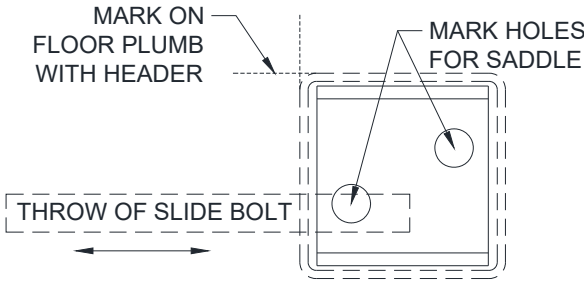

7. Use the mark placed on the floor in the previous steps, to locate where the saddle will be and mark the hole locations by placing the saddle on the floor. See ***Figure 5.13***.
8. Double check the width dimensions provided on the job construction drawings, then drill holes for the saddle fasteners.
9. Install saddles using the provided hardware.
10. Guides mounting to tubes, sometimes require the use of a slip joint. There are (3) mounting styles for slip joints, as detailed in ***Figure 5.14, 5.15 and 5.16***. Refer to the job information to determine the correct mounting style for the unit. Locate the Slip Joint Mounting Member(s).

    Note*: If the unit does not have slip joints and the top mounting for the tube is not provided by the manufacturer, install as recommended by supplier, then proceed to* ***Step 15****.*

11. Use the job information and the marks made in the previous steps to determine the correct Slip Joint Mounting Member location. Install using the provided hardware. Use only enough fasteners to hold the Mounting Members securely in place (2), as they will be removed in a later step.
12. Determine the required tube length. Refer to ***Figure 5.14, 5.15 and 5.16***, depending on which configuration you are installing.
    a. Measure from the "*Floor to Slip Joint Mounting Member"* as shown in the corresponding figure below. Record this measurement.
    b. To allow for expansion, the steel tube will need to be cut short. To determine the required "*Expansion Allowance*", round the measurement taken in the previous step **<u>up</u>** to the nearest foot increment. Multiply the rounded value by 1/8 in/ft. Refer to the table below for examples:

Table 5.1 – Slip Joint Expansion Allowances

Floor to slip joint mounting member (ft)	9	10	11	12	13	14	15	16	17	18	19	20
Expansion Allowance (in)	1 1/8	1 1/4	1 3/8	1 1/2	1 5/8	1 3/4	1 7/8	2	2 1/8	2 1/4	2 3/8	2 1/2

    c. Calculate the Tube Length:
       Tube Length = "Floor to Slip Joint Mounting Member" – "Expansion Allowance"
    d. Cut the tubes to the calculated "*Tube Length*". Make sure you cut the excess tubing from the top. Otherwise you will cut off necessary mounting holes and/or notches.

       Note*: If regular saddles are provided, the tube length will have to be adjusted because the tube will not sit on the saddle flanges instead of the floor. Subtract the thickness of the flanges from the tube length.*

13. Remove the Slip Joint Mounting Member(s). Place the Slip Joint Mounting Members in the tops of the tubes.
14. Orient the tubes (ensure the guides, mounting holes or notches are facing the correct direction.) Place the bottom of the tube over the saddle. Stand the tube upright and reattach the slip joint mounting member using the previously drilled/marked holes to locate. Use all provided fasteners at this stage. Check that installed tube is plumb.

Figure 5.14 – Slip Joint - Between Floor and Ceiling Mounting Assembly

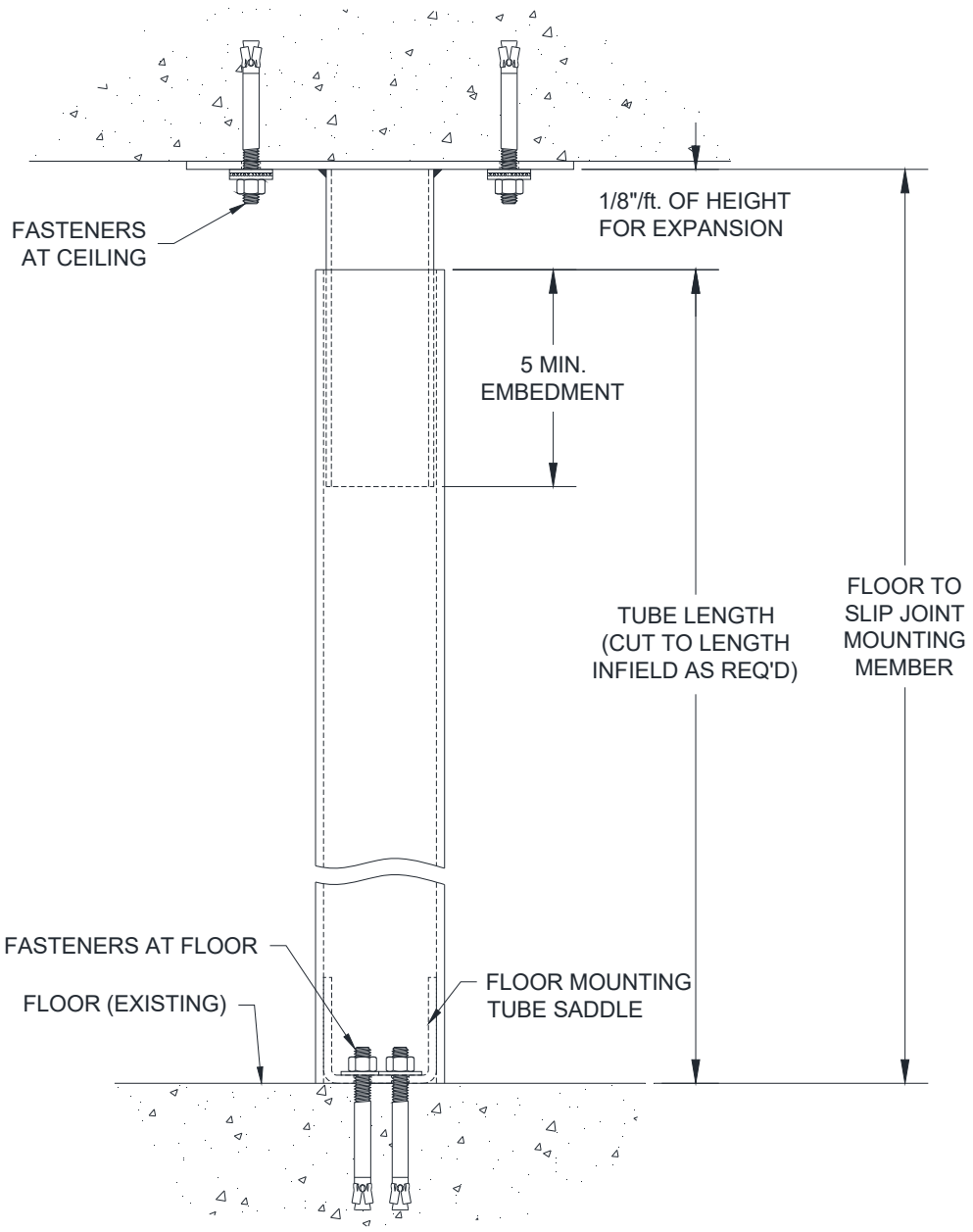

Figure 5.15 – Slip Joint - Floor to Wall with Plate Mounting Assembly

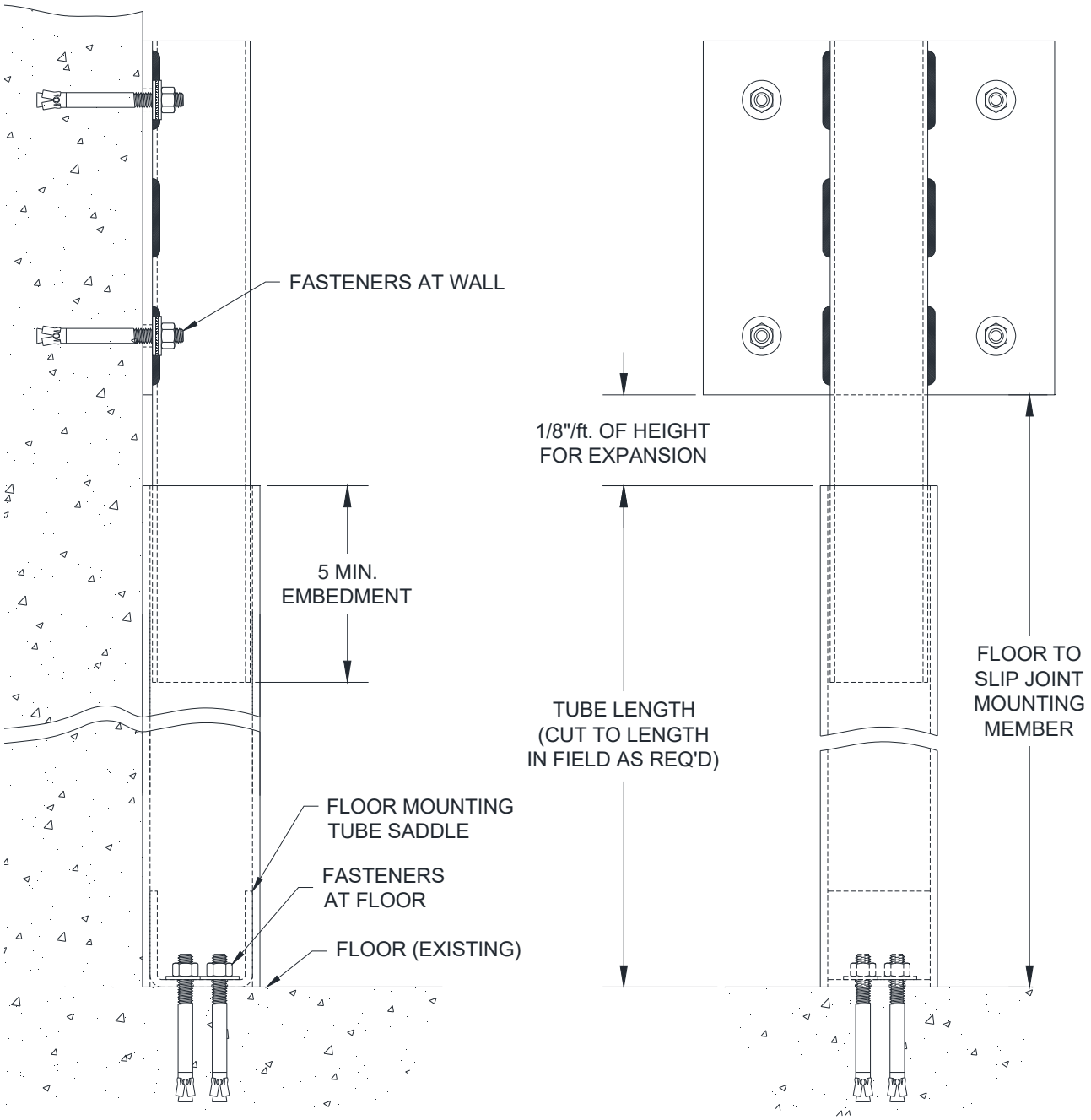

Figure 5.16 – Slip Joint - Floor to Wall with Angle Mounting Assembly

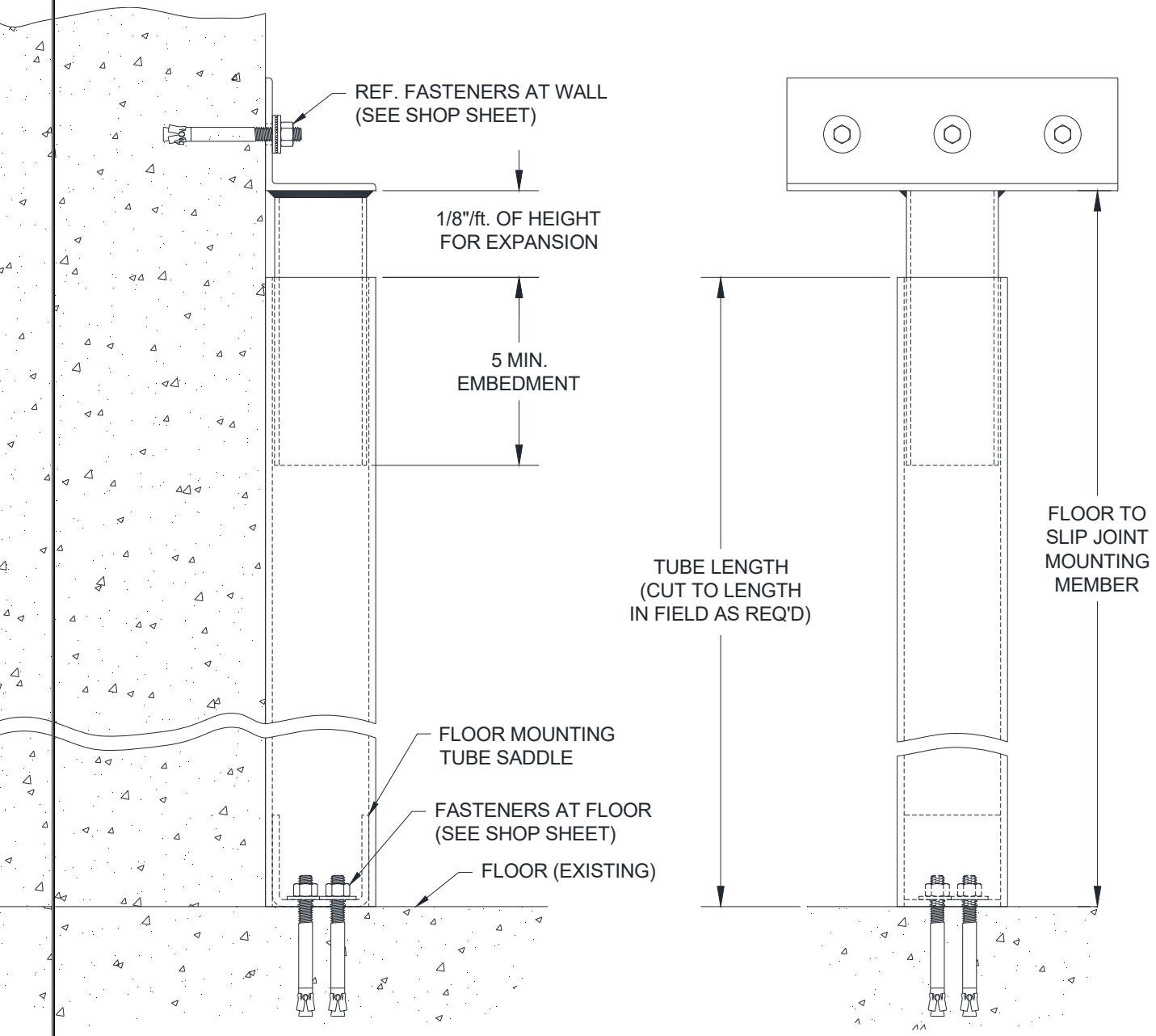

15. If you removed the inner and outer angles in ***Step 2***, reinstall them at this point.
16. Reassemble guides if necessary.
17. Adjust the guide gap if necessary.

NOTICE

Guide gap is **critical** and must be verified. Check the job construction drawing to determine what guide gap is required for the unit.

18. Preload the assembly fasteners per the torque recommendations in the *Torque Specifications Tables in* ***Section 11***.

- **Mixed Guides (One Face of Wall and One Between Jambs):**
    1. Refer to the job construction drawings for specific mounting information.
    2. Follow the steps in the preceding sections for each of the respective guide configurations.
    3. Ensure that the guide centers (centerline of the guide openings) are aligned before proceeding.

Section 6 - Barrel and Brackets

- **Preparation of the Barrel and Brackets**

  Note: *Check to see if a hood support will be required. If so, refer to the* ***"Hood Support Installation"*** *section before proceeding to the barrel and brackets.*

1. Refer to the job construction drawings to determine the "coil side" of the opening, or the side of the opening on which the coil is to be installed. Then determine which jamb wall is your "operator side", or side on which the operator is to be installed. The following instructions refer to these directional cues.

   Note: *Units* ***without*** *operators (such as push-up units) are still considered to have an "operator" side. The shaft and job drawings will be marked with "operator" side regardless of the operation of the door so that it can be used as a directional cue.*

2. Unpack the barrel assembly. Note the markings on the barrel, see ***Figure 6.1*** below.

Figure 6.1 – Barrel Markings (left hand adjust shown)

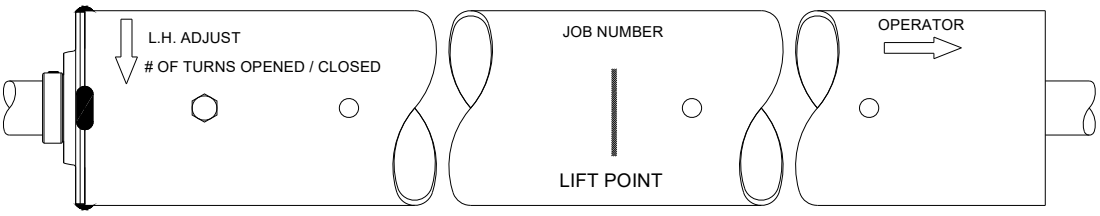

3. Position the barrel assembly on the coil side of the opening, with the end marked "operator" towards the "operator side" of the opening. In order to alleviate the ring and bracket installation, place the barrel assembly on blocks or spacers such that it is elevated off the ground.

   Note: *Choose sufficiently sized blocks. The barrel assembly should be elevated off the ground enough that the brackets can be installed without contacting the floor.*

4. Check to make sure the required number of turns is noted on the barrel, as shown in ***Figure 6.1***. Consult the distributor or the manufacturer if you cannot locate this information. Check that these numbers match the information provided on the job information. Take note of these numbers, as access to this information may be obstructed once the curtain is installed.
5. Typically the adjusting wheel is not shipped attached to the barrel. However, if the adjusting wheel *is* attached to the barrel, remove by loosening the bolt or set screws that secure the adjusting wheel to the barrel and sliding the wheel off the inner shaft. See ***Figure 6.2***.

Figure 6.2 – Removal of adjustor from barrel assembly

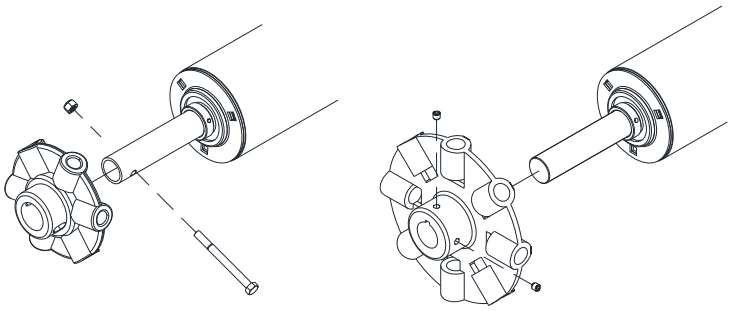

6. Refer to the job information provided with the door to determine the correct ring type and quantity. If the unit does not require rings, skip to *Step 9*. Many larger diameter (8”, 10”, 12”, etc.) barrel assemblies do not require rings for curtain attachment.
7. Locate the rings in the hardware bag/box provided. Check that you were supplied the correct type and quantity. (Use ***Figure 6.3*** as a visual aid.)
8. Use the information in ***Figure 6.3*** to install the rings.

Note: *It is* ***critical*** *that the rings are installed correctly in relation to the coiling direction, or the direction of wrap as the door travel upward. The rings act as graduated spacers, meaning they increase in diameter such that the curtain wraps in a consistent and smooth manner. Use the arrows on the figures below to determine the correct orientation of the rings in relation to the coiling direction.*

Figure 6.3 – Ring Installation

SP0003 (for 4" barrels) and SP0006 (for 6" barrels) Stamped Rings, and SP0273 Cast Rings:

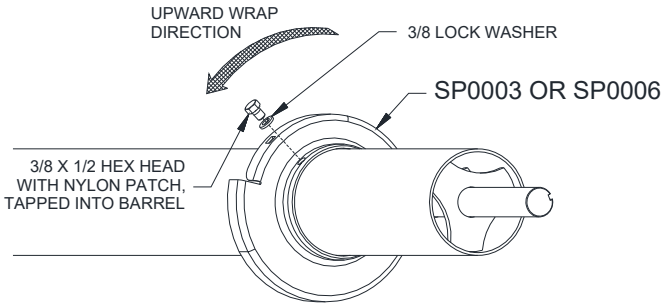

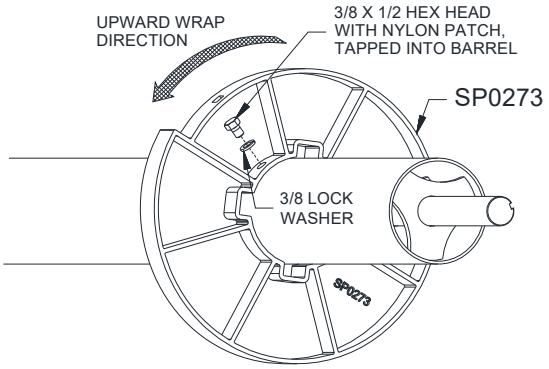

Installation:

- *Slip the rings over the barrel, noting direction of wrap, and place over tapped hole in barrel. Insert the 3/8" x ½" hex bolt (with nylon patch on threads) through the ring into the tapped hole in barrel.*
- *Be sure rings sit straight on barrel and tighten the fasteners to minimum 20 ft lbs of torque.*

SP0251 Cast Rings:

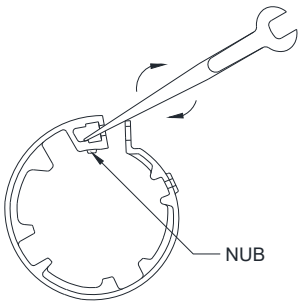

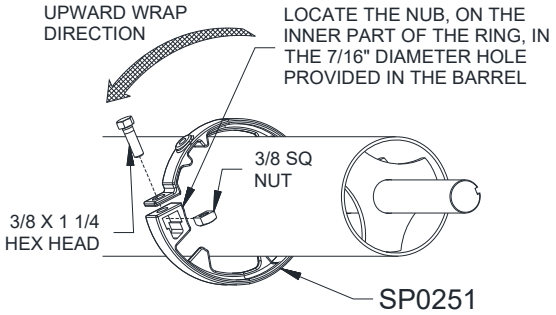

Installation:

- *Use a small pry bar or large standard screwdriver to spread the gap in the ring by prying between bolt flange and the nut cradle of the casting (see above).*
- *Slide the ring over the barrel, noting direction of wrap, and rotate the ring so the locating nub in the casting aligns with the locating hole in the barrel.*
- *Insert the 3/8 square nut into the nut cradle of the casting and the 3/8" x 1-1/4" hex bolt through the bolt flange in the casting and tighten to minimum 20 ft lbs of torque.*
- *Be sure ring sits straight on barrel.*

9. Locate the brackets. Determine the “operator” and “adjustor” brackets by referring to ***Figure 6.4***. The “operator” bracket may vary significantly based on the operation of the door. The “adjustor” bracket will contain a label with spring adjustment instructions.
10. Remove the adjusting wheel if you haven’t previously, and slide the adjustor bracket over the inner shaft of the barrel assembly. Install the adjusting wheel (see ***Figure 6.2***).
11. Slide the operator bracket over the gear end until the inside face of the bracket is approximately 3 inches from the edge of the outer shaft. Do not tighten the set screws at this point, as you may need to adjust the position of the bracket. You may choose to install the drive sprocket (if present) at this point.

    Note: *Do not install the operator until the barrel and bracket assembly is hoisted into position and securely fastened to the guides. Installing the operator at this stage will cause the assembly to be lopsided and cumbersome, making it difficult and potentially dangerous to hoist into position.*

Figure 6.4 – Brackets and Barrel Prior to Installation

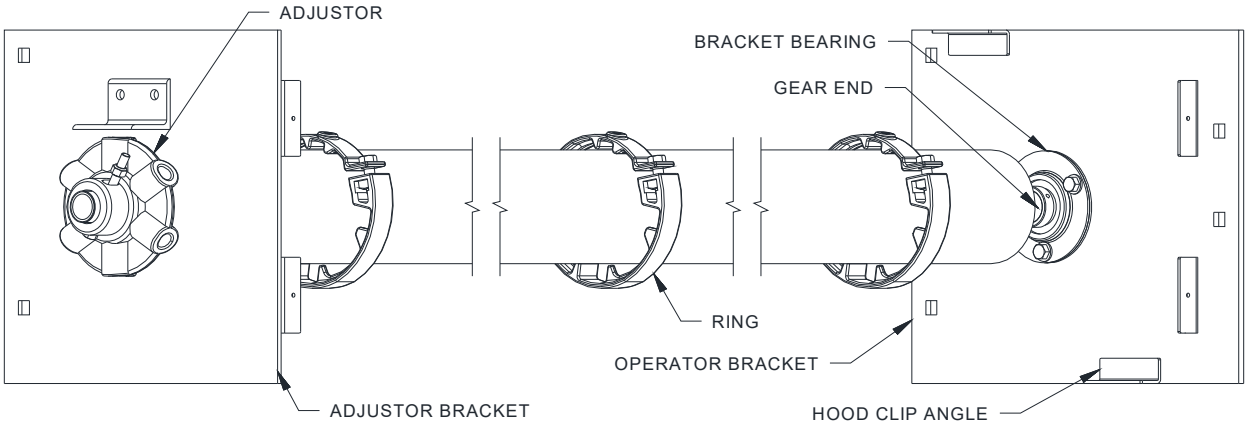

- **Hoisting and Installing Barrel Assembly**

1. The following methods can be used for hoisting them into place:
   - Crane Hoisting: Place a sling or lifting agent under the barrel assembly at the “lift point” provided on the barrel, see ***Figure 6.1***.
   - Forklift Hoisting**:** Space the forks evenly under the “lift point” provided on the barrel, see ***Figure 6.1***. Ensure that the barrel assembly is positioned close enough to the tips of the forks that the fastening holes in the bracket can be aligned with those of the guides without the forks contacting the wall. Secure the barrel assembly to avoid the slipping off the tip of the forks.

⚠WARNING

The addition of brackets may offset the balance slightly from when the “lift point” was marked. Check to make sure the assembly is properly balanced before hoisting.

2. Before hoisting, refer to the hardware sheet and ensure that the proper type and quantity of fasteners were provided for the bracket installation. Measure the distance between the brackets and compare that to your wall angles (*or between mounting angles if tubes are present*). Readjust the brackets as needed before hoisting.
3. Center the barrel assembly between the guides, keeping approximately 2 feet of clearance between the barrel assembly and wall/guides.
4. Raise the barrel assembly up to the approximate bracket mounting level. The brackets should be clear of the outer and inner guide angles.

Note: *Position the brackets in the upright position, with the mounting holes facing the wall, before moving the assembly towards the wall. It may be difficult to rotate the bracket when in close to the wall.*

5. Slowly maneuver the barrel assembly towards the guide, and align the mounting holes of the brackets with those of the wall angles (*or mounting angles if tubes are present*).
6. Insert the specified bolts and snug tighten, see ***Figure 6.5***.

Figure 6.5 – Bracket Mounting Configurations and Hardware

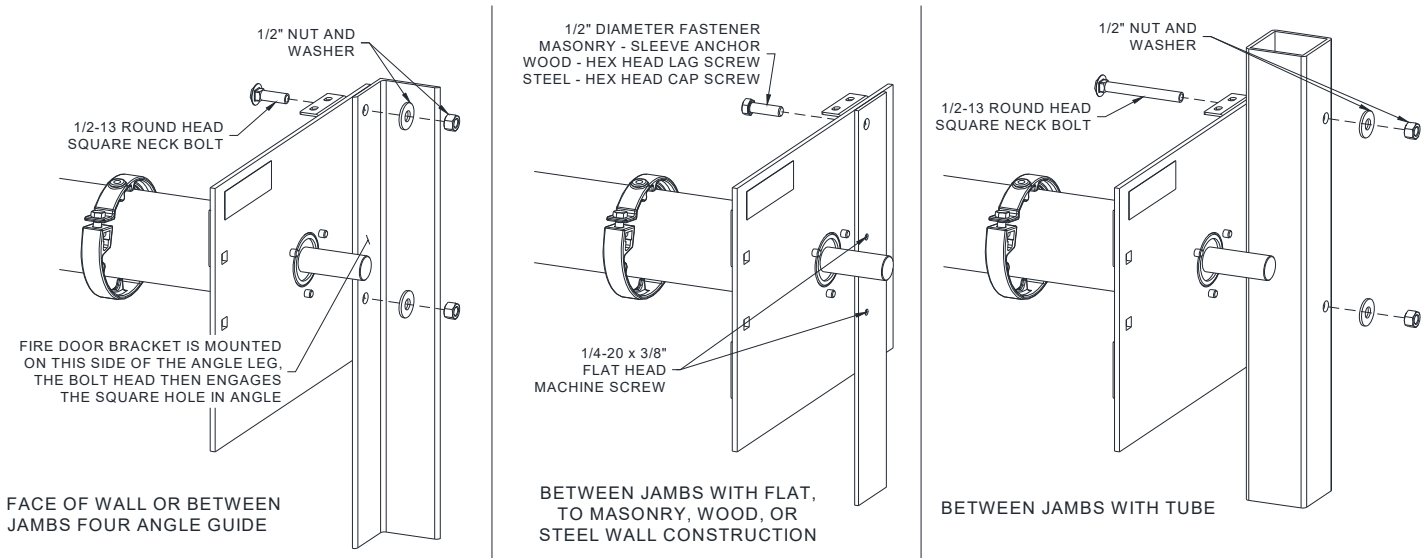

7. Check to see that the barrel is positioned properly between the brackets. That is, so that the proper amount of space is allowed between the barrel and the brackets. Typically the space is equal at both the operator and adjustor side. Adjust as necessary.
8. Place a level in the center of the barrel. If the shaft is **not** level:
   - Check the dimensions of the brackets from the top of the bracket to the center of the barrel.
   - Verify that the bracket mounting fasteners are the same distance from the top of the bracket.
     a. If the dimensions **are not** correct, contact the Service Department.
     b. If the dimensions **are** correct, the floor may be out of level, causing the bracket mounting holes in the guides to be out of alignment.
9. Fully tighten mounting bolts to the torque specifications in this manual. See *Torque Specification Tables* in ***Section 11.***

NOTICE

Proper pretension of the bracket mounting bolts will benefit the life of the bolts and brackets.

10. If the adjusting wheel was not previously installed, install it now. Do not install the adjustor pin yet.

Section 7 – Motor Operator Installation

- **Motor Operator Installation (if required):**
  1. Unpack the motor operator from the shipping box and retrieve the *Operator Mounting Bracket* and bolts provided in the kit.
  2. There are several motor mounting configurations that can be formed with the supplied components. Refer to the shop drawings and components supplied with the kit in order to identify the specific style of mounting ordered for the unit. Some of the types of mounting are:
     - Vertical Bracket
     - Vertical Bracket Mounting With Tight Headroom
     - Wall Mounting
     - Horizontal Top of Coil
     - Horizontal Front of Coil
     - Horizontal Upside Down Front of Coil
     - Vertical Tube Mounting
     - Vertical Tube Top of Coil
  3. If an operator cover is supplied, refer to the included Operator Cover Installation Instructions to assemble the cover mounting plate with the operator mounting bracket.
  4. Mount the operator mounting bracket to the operator using the supplied fasteners.
  5. Mount the operator mounting bracket to the operator bracket according to the shop drawings using the supplied fasteners.
  6. Install controls and wire the operator. Refer to the wiring diagram provided with the operator for proper connections and voltages. The controls should be installed in an area from which the door/opening is clearly visible. This will allow an individual operating the unit to make a visual inspection of the opening for any obstacles or other potential hazards before setting the door into motion.

     Note: *Do not attempt to set the upper and lower limits until the curtain is installed.*

- **Attaching Additional Bracing (if required):**
  1. Attach a clip angle to the operator mounting bracket and the bracing angle to the clip angle. Snug all bolts.
  2. Mount the other supplied clip angle to the bracing angle and swing the bracing angle to the wall or structural support.
  3. Align the mounting face of the clip angle with the face of the wall, mark and drill a mounting hole for the size of the supplied mounting fastener, and secure the clip angle to the wall with the fastener.
  4. Square the operator-mounting bracket, adjusting the bracing angle as necessary, and fully tighten all the mounting bolts.
  5. Lift the motor operator into position on the mounting bracket and align it with the appropriate hole pattern. ***See Figure 7.1 for operator mounting details.***
  6. Insert the fasteners included in the kit from the bracket side first into the mounting foot of the operator and tighten the nuts with lock washers.

     Note: *All mounting bolts are supplied with nuts and lock washers.*

Figure 7.1 - Additional Operator Bracing

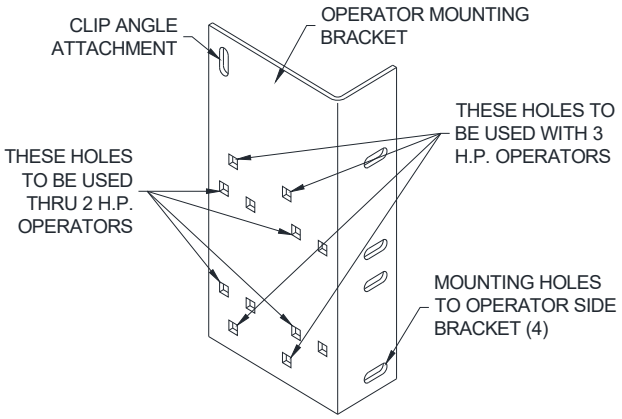

- **Curtain Installation**
  1. Remove the stoppers from the guides, or position them so they do not protrude into the opening.
  2. Open the curtain packaging. Leave the plastic straps that keep the curtain from uncoiling in place. It may also be beneficial to leave some of the packaging under the curtain to protect the finish during installation.
  3. The coil will be provided with the top of the curtain on the outside, thus leaving the fastening sections exposed. Position the coil on the floor between the guides so that the open end of the fastening sections is facing up and nearer the wall.
     Remove the outer guides.
  4. Locate the curtain attachment hardware provided with the unit. Refer to the job information to ensure you have the correct type and quantity.
  5. Lift the coil until it is just below the shaft. Using appropriately rated straps, sling the coil from the shaft as shown in ***Figure 8.2***. Remove the plastic strapping securing the coil at this point.
  6. Uncoil the curtain enough for the fastening sections to reach the attachment points on the shaft. Fasten them by aligning the fastening section with the hole in the ring or shaft respectively, and fasten using the provided hardware (See ***Figure 8.1***). If the curtain is too heavy to uncoil by hand, use the method described in the following step to get the fastening sections in position.

Figure 8.1 - Installing the Fastening Section

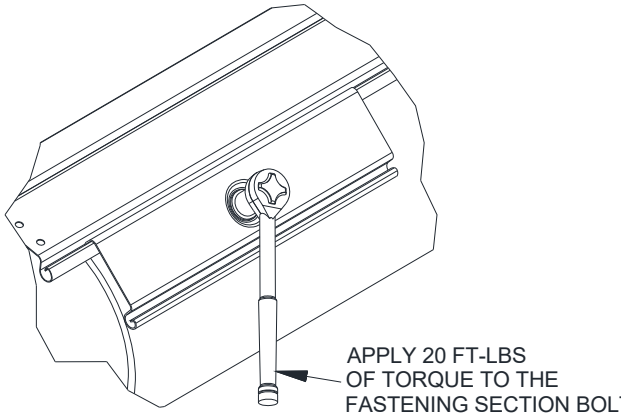

  7. Uncoiling a slung curtain using the operator/adjusting wheel:
     - For units with operators, use the hand chain, crank or override feature of the motor to rotate the shaft in the “open” direction. Be sure not to overrun the limits of the motor. The upper motor limit may have to be adjusted to reel the entire curtain onto the shaft. Make sure the adjusting wheel is **not** pinned in place for this operation.
     - For push-up units, turns can be added to the adjusting wheel in order to assist in rotating the shaft. Keeping count of the turns added to the spring at this stage will save installation time later.
  8. Continue to rotate the shaft, reeling the curtain out of the sling and onto the shaft until the bottom bar reaches the bottom of the bracket.
  9. Replace the outer guides.
  10. Feed the bottom bar into the guides and lower the curtain until the bottom bar is below the stopper location.

11. Since there is no spring tension holding the curtain open, the curtain may fall if released. If the operator cannot be used to hold the curtain in the open position, place C-clamps or vice grips, see ***Figure 8.4,*** on the guides just below the bottom bar *-or-* rest the bottom bar on the slings used to hang the shaft in the previous steps to hold the door open.
12. Replace the stoppers.

Figure 8.2 - Slinging the Curtain

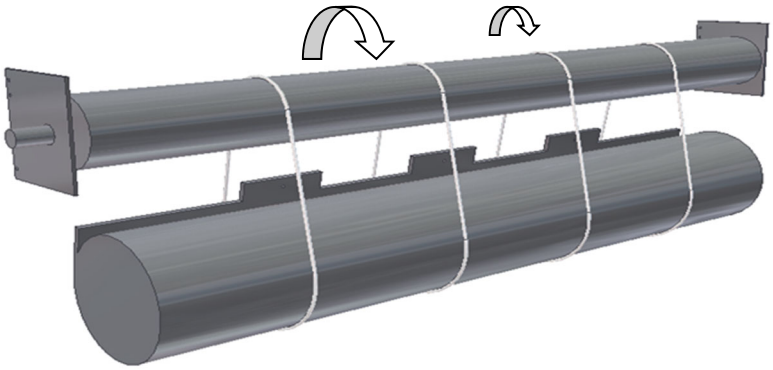

- **Applying Spring Turns (not including chain sprocket adjustors):**

NOTICE

Applying more turns on the springs than is recommended will reduce spring life and can cause failure. **Do not** exceed the recommended number of turns stated on the barrel or job construction sheets.

1. Refer to the job information or markings on the shaft for the number of spring turns required on the unit.
2. To apply spring charge, remove cotter and stop pin from adjusting wheel.
   Note*: SA0005 adjustors require the use of an adjustor bar as a stop as well as a 3/8" thick x 2" wide x 30" to 40" long A36 steel bars to apply spring torque. See* ***Figure 8.3****.*
3. Using two ½" diameter (or greater depending on the adjusting wheel) steel rods, approximately 18"-24" long, apply spring torque by inserting both rods into adjustor wheel one above the other.
4. Rotate wheel in a direction of raising the curtain. Maintain applied torque with upper rod, while removing lower rod. RE-insert this rod above the other and continue applying torque one notch at a time using this hand over hand procedure until the specified number of spring turns has been applied.

Figure 8.3 – SA0005 Spring Adjustor

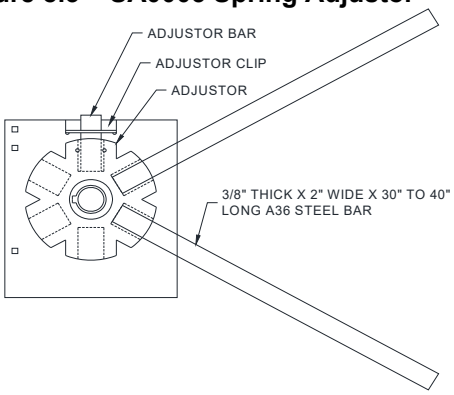

5. Replace stop pin or bar into adjustor wheel as shown in ***Figure 8.5*** and insert the cotter pin to hold it in place.
6. The spring should now hold the door in the open position. Remove any devices applied to hold the door in the open position (clamps, slings, vice grip, etc.)
7. Check curtain for ease of operation. If the door operates correctly, skip to the next section, if not, continue to the next step.
8. Final spring tension adjustment, if necessary, should be increased or decreased with the curtain in the fully open position. Insert one [two if necessary] ½" diameter steel rods into adjustor wheel.
9. Remove cotter pin and stop pin from adjustor wheel and begin to increase or decrease tension.
   - To increase tension, rotate the wheel in the direction of raising the curtain.
   - To decrease tension, carefully rotate the wheel in the direction of lowering the curtain.
10. Recheck the balance in one notch increments (one notch at a time). Re-insert stop pin and cotter pin.

Note: *If you have difficulty balancing the door, or the number of turns required to balance the door varies significantly from the quantity provided, contact the* ***Service Department.***

Figure 8.4 – Clamping the Guides, Applying Turns

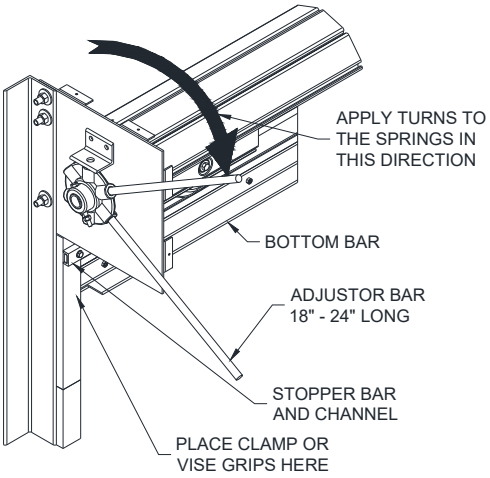

Figure 8.5 – Pinning the Adjusting Wheel

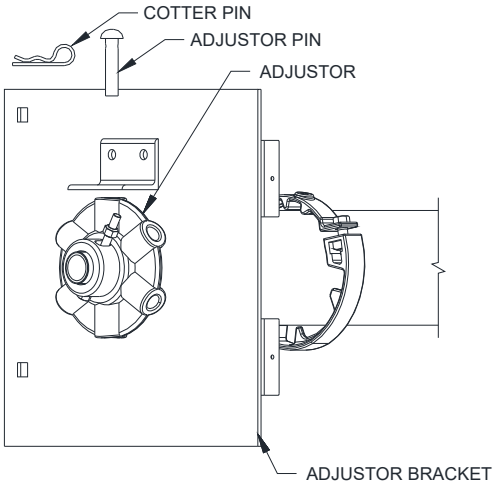

11. After cycling the door to the full OPEN and full CLOSED positions a minimum of 6 times, raise the door to the full OPEN position against the stops. If the door bottom bar is not level (within 1/4” across opening width), apply shims (Part No. 521870), as required, to adjust bottom bar level within 1/4”. ***NOTE:*** Use only Part No. 521870 shims to make these final adjustments.

NOTE: The use of shims does not affect the durability or longevity of the door or any of its components.

Section 9 – Lintel Seal

- **”Z” Shaped Seal**

Figure 9.1 - “Z” Shaped Lintel Seal Cutout

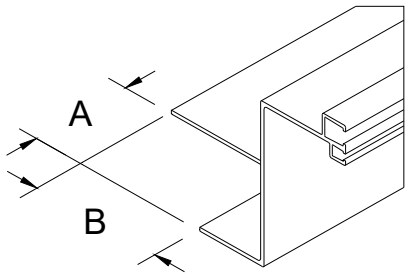

Note: *The Lintel Seal should be installed before the hood and fascia, and after all other door components are installed and operational.*

1. Clean and inspect the top of the opening where the *Lintel Seal* will be installed. See shop drawings for details.
2. Make the “A” & “B” cutouts to the ends of the extrusion(s) according to the dimensions on the shop sheet to allow for the guide setbacks and pack-off. (See ***Figure 9.1***)
3. Mark and drill the mounting holes in the extrusion. Ensure the mounting holes allow sufficient clearance for the fasteners being used to attach the lintel seal. The mounting holes should be spaced at a maximum of 24 inches apart. Position the holes equally between the front edge of the lintel and the back edge of the extrusion.
4. Place the lintel seal at the bottom of the lintel with the brush contacting the curtain (in the closed position) with the bristles pushed to about a 45-degree angle. (See ***Figure 9.2***)

Figure 9.2 - “Z” Shaped Lintel Seal

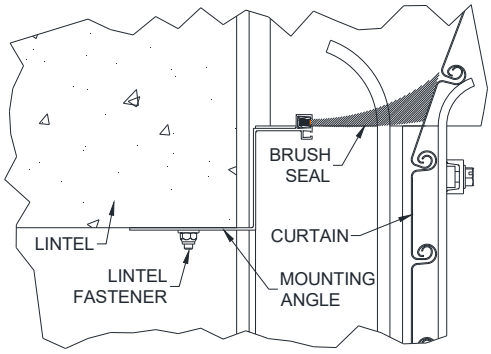

Note*: Check the lintel brush for proper contact on the door curtain at the edges and in the middle when the door is both open and closed (mounting extrusion will not sit flush with the corner of the lintel in most cases). On large doors, toward the center, the multi-piece Lintel Seals may have to be angled inward and trimmed on the edges to follow the bow of the door curtain when closed. (Make sure that the brush stays in contact with the door and that the door does not hit the extrusion when it is fully opened.)*

5. Once you determine the correct mounting position of the lintel seal, mark the mounting hole locations on the header using the previously drilled holes in the mounting extrusion as a template.
6. Remove the lintel seal and prepare the mounting hole locations for the proper fasteners supplied with the unit.
7. Replace the lintel seal in the opening and insert the fasteners. Make any adjustments the Lintel Seal and properly orient the multi-piece lintel seal (if present) and tighten the fasteners.
8. Operate the door and ensure that the lintel seal sustains sufficient contact with the curtain (The curtain should always touch the Lintel Seal and not hit the extrusion).

- **”L” Shaped Seal**

Note: *The Lintel Seal should be installed before the hood and fascia, and after all other door components are installed and operational.*

1. Clean and inspect the top of the opening where the *Lintel Seal* will be installed. See shop drawings for details.
2. Mount the angle to the lintel with the correct fasteners according to the wall construction. (Refer to the job information for the correct location of the angle from the lintel.)

   Note*: Check the lintel brush for proper contact on the door curtain at the edges and in the middle when the door is both open and closed. On large doors, toward the center, the multi-piece Lintel Seals may have to be angled inward and trimmed on the edges to follow the bow of the door curtain when closed. (Make sure that the brush stays in contact with the door and that the door does not hit the extrusion when it is fully opened)*

3. Place the brush extrusion in place on the mounting angle so the brush makes contact with the door in the closed position. (Brush should be at about a 45-degree angle) Mark the mounting holes locations. Before removing the lintel seal, scribe a line on the back edge of the extrusion and mounting angle. This will help ensure the lintel seal is replaced in the correct location.
4. Remove the lintel seal. Drill the required pilot/clearance holes in the mounting extrusion. The mounting holes should be spaced at a maximum of 24 inches apart. Position the holes equally between the front and the back edges of the extrusion, or as needed to line up with the mounting angle.
5. Replace the lintel seal on the angle using the scribed line as a guide. Mark the mounting holes on the angle using the previously drilled holes in the mounting extrusion as a template. Remove lintel seal and drill the required pilot/clearance holes.
6. Attach the extrusion to the mounting angle with the proper fasteners.
7. Operate the door and ensure that the lintel seal sustains sufficient contact with the curtain (The curtain should always touch the Lintel Seal and not hit the extrusion).

Figure 9.3 - “L” Shaped Lintel Seal

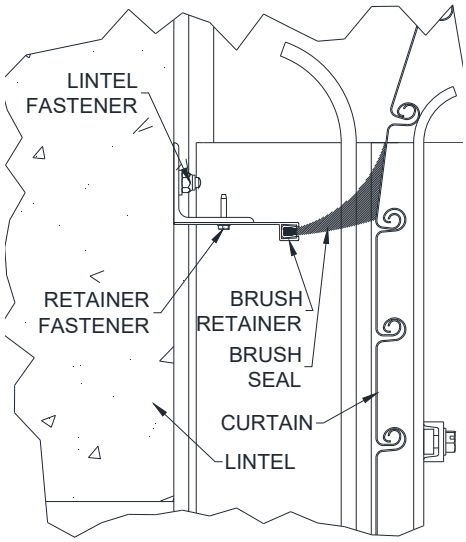

- **Hood Support installation:**
  1. Refer to the job information to determine the type and quantity of hood supports required for your door. Hood supports will be noted on the elevation view of the job construction drawings. See ***Figure 10.1*** for hood support types.

Figure 10.1 - Hood Supports

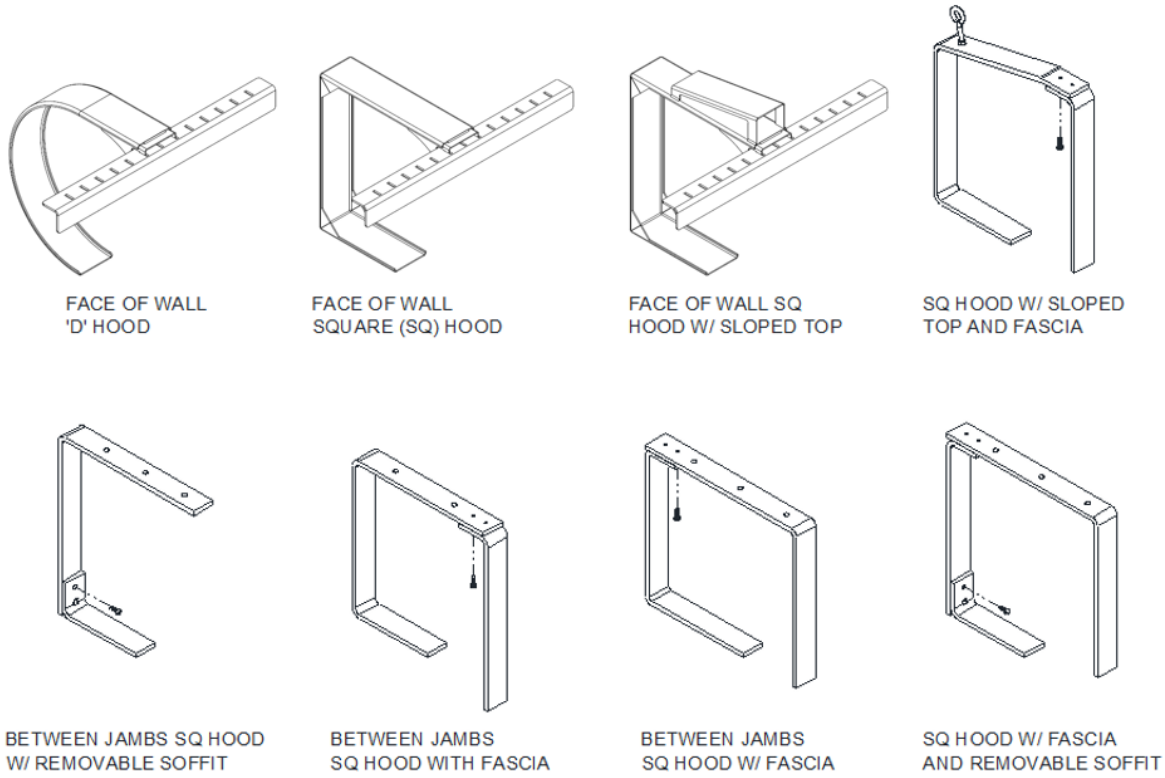

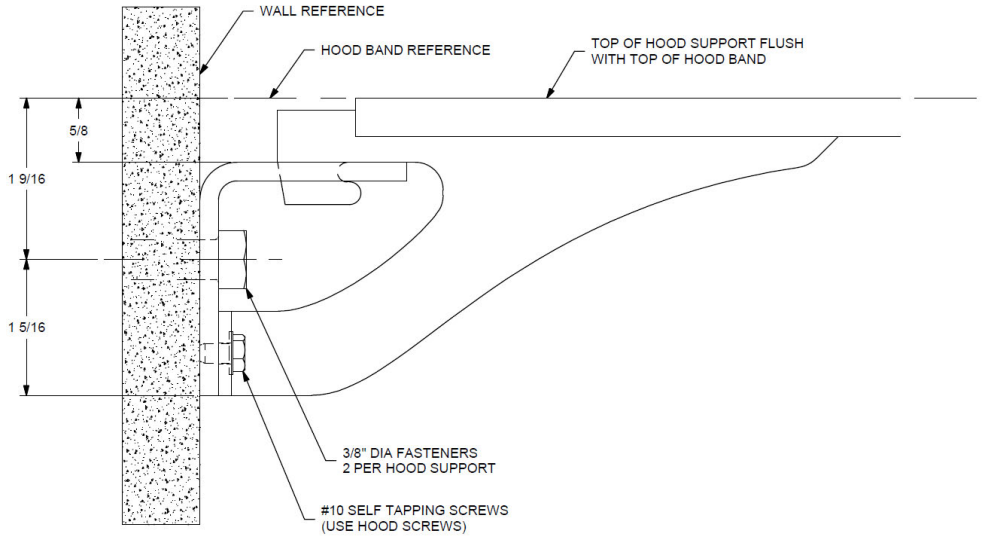

Note: *See above detail for face of wall units; the wall angle is offset 5/8" from top of hood band to allow hood support to be flush while installing the hood.*

2. Determine where the support(s) will be located between the guides.
    a. If multiple supports are required, see the job construction drawings to determine the centerline of each.
    b. If a single support is required, it will be located at the center of the unit.

3. Mark a line on the lintel at the centerline of each support.

4. Check the construction at the support locations to be sure it is strong enough to handle the weight of the hood.

    Note: *If the construction is not strong enough, do not proceed until rectified.*

5. The term "top of coil" refers to the top edges of the brackets or hood band, see ***Figure 10.1.1***
    a. If there is a ceiling at the top of the coil, skip the next step.

Figure 10.1.1 – Top of Coil

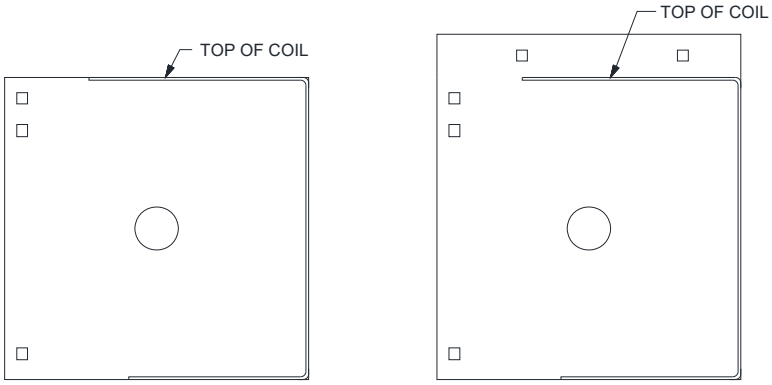

6. Mark a line at the top of the coil at both guides of the unit. Project the lines together to make a continuous line.
    a. This will help locate the top of the hood support which will keep the hood level.

7. Project a line from the fascia mounting location (fascia mounting channel or fascia side of the tube) from one guide to the other.

8. Mark a line at the support centerline along the fascia line.

9. Prepare the location of the attachment point of the support(s) prior to installing the barrel. This will make installing the support much easier when the time comes to attach it to the lintel/header or ceiling.
    a. Hold the support in place at the determined location and mark the mounting hole locations.
    b. Drill holes in the construction and hood support mounting angle.

10. Attach the hood support mounting angle to the lintel/header or ceiling to be sure the mounting holes were located properly.

11. Once the barrel, brackets, curtain are installed, and necessary testing was done on the unit, re-install the hood support.

- **Hood and Fascia installation:**
  1. Determine what type of hood is provided. See **Figure 10.2** for possible hood configurations. This can be done by:
     - Looking at the brackets and identifying a half-circle shaped flat (D-shaped hood) or straight flats (square or sloped).
     - Looking in the hood box and comparing to the job construction drawings.

Figure 10.2 – Hood Configurations

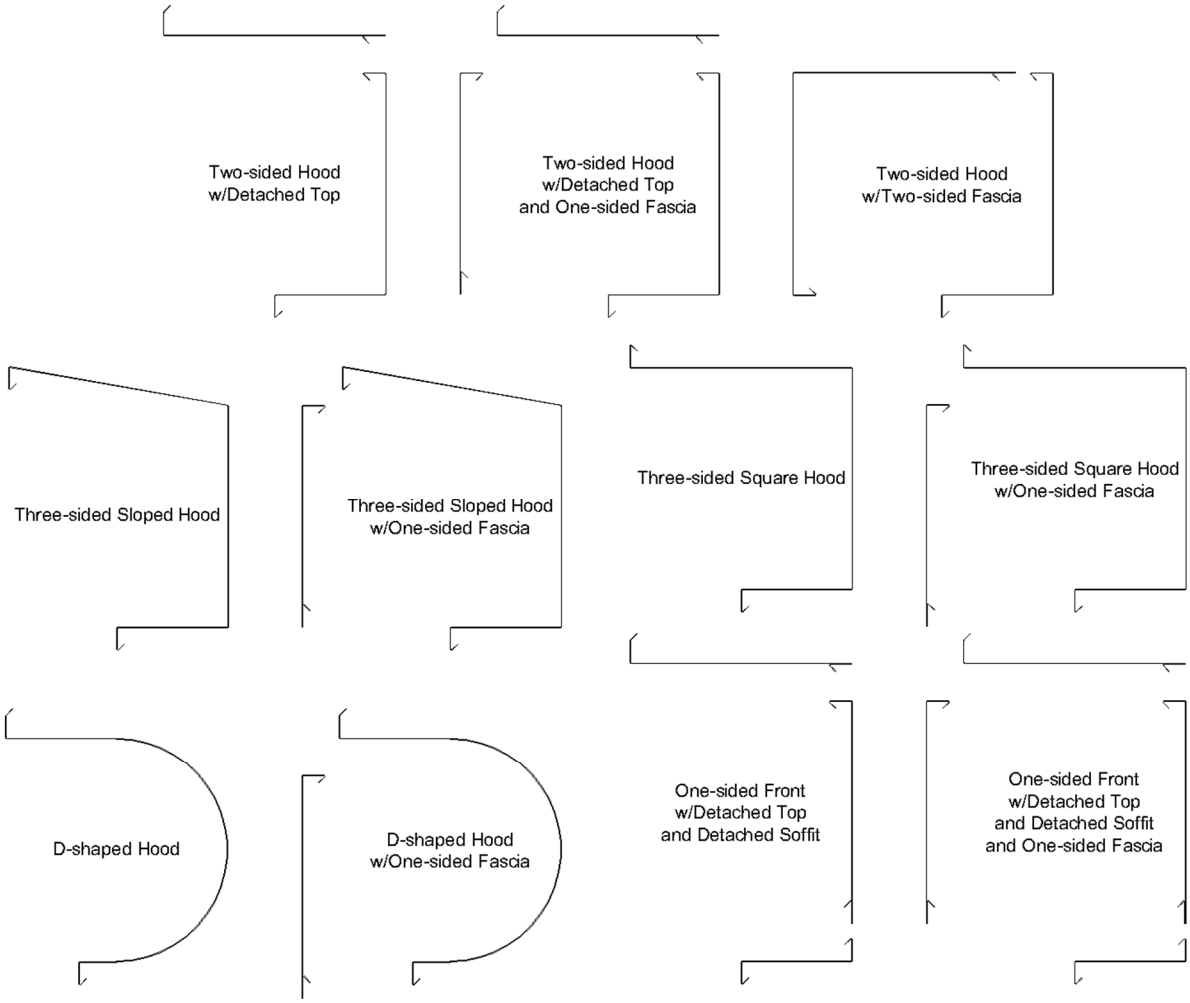

  2. If no fascia is included, skip to Step 3.

     <u>If a fascia is included</u>, it will be installed first. Fascia fastening varies by job condition but is typically secured to the guides, the brackets, or to the wall. Install the right-most section first, ending in “-R”. Continue leftward adding fascia sections, overlapping the right-hand section by 4”

  3. If the hood has more than one section (separate left, right, or center), skip to Step 5.

     <u>For single-section hoods</u>, begin with the front-most piece. Install by holding the hood up to the coil area and pushing it against the flats on the brackets. Center the hood so the gap is the same at

both brackets. Pre-drill with a #21 or 5/32” drill in at least one place on every face of the hood, at both the left and right sides. See **Figure 10.4** for recommended fastener locations.

4. After fastening the first hood piece, continue with the detached soffit and top, if included.

5. For hoods with multiple sections, begin with the front-most right-hand hood piece, ending in “-R”.

   Install by holding the hood up to the coil area and pushing it against the flats on the brackets. Butt the hood piece against the bracket to minimize the gap. Pre-drill with a #21 or 5/32” drill in at least one place on every face of the hood, at both the left and right sides. See Figure **10.4** for recommended fastener locations.

   The hood section should cover the hood support completely (approx. 4”). Temporarily clamp hood section to hood support until the next section is installed.

6. Continue leftward installing sections of the same type of hood piece before starting with the right-most soffit or top pieces. See **Figure 10.3** for an example of the order hood pieces should be installed. No cover is used on the splice between hood sections.

Figure 10.3 – Multiple Hood Sections

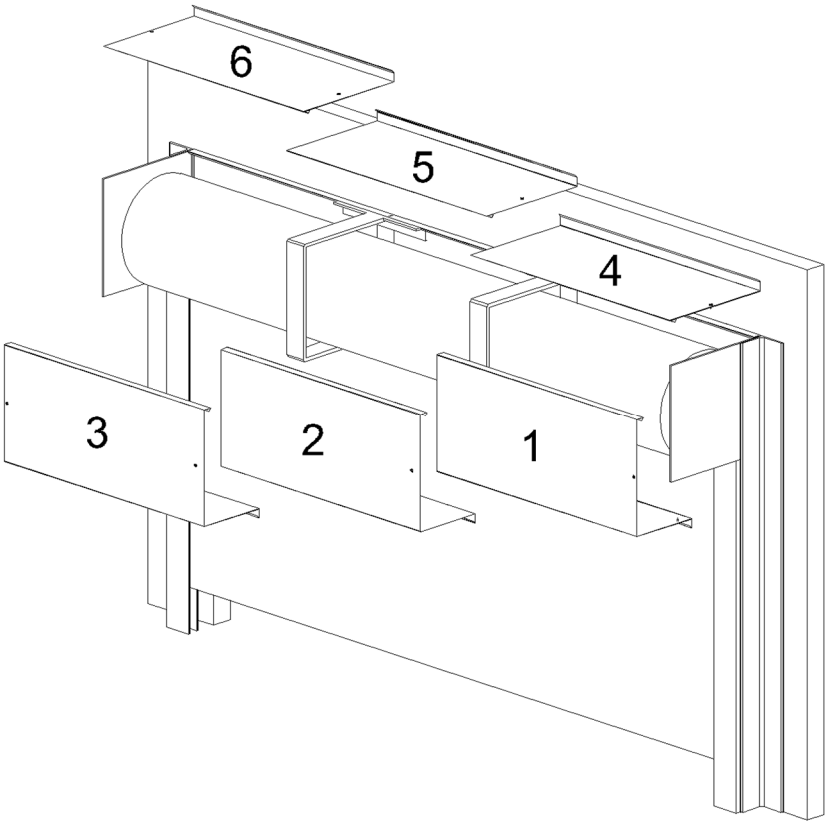

Figure 10.4 – Recommended Fastener Locations

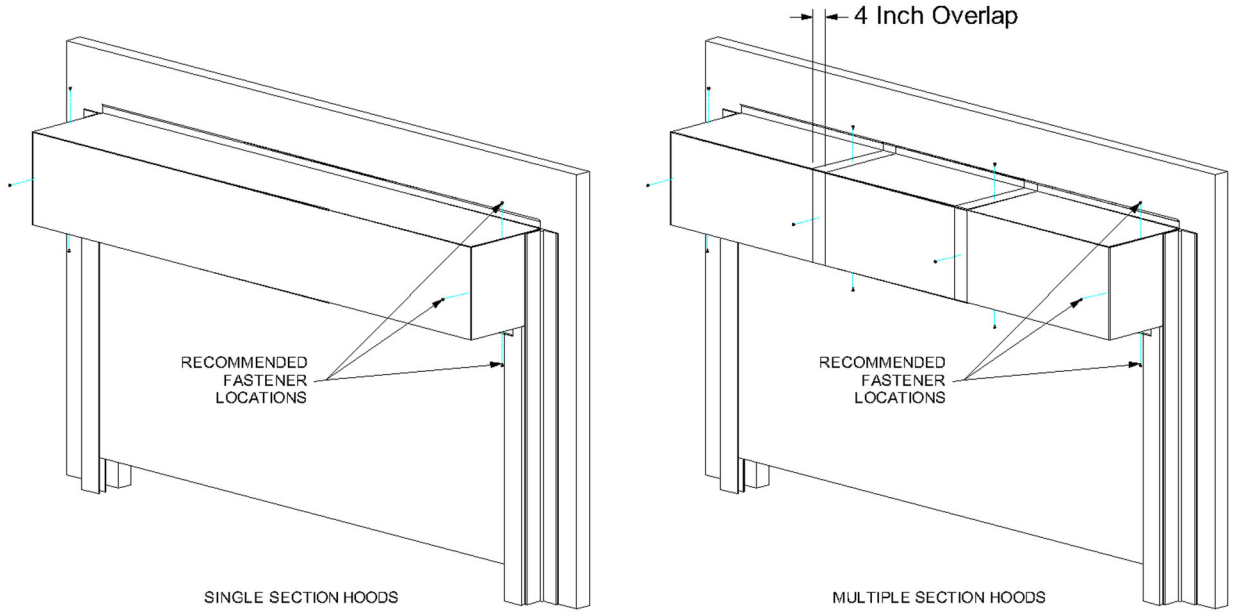

7. If the door is mounted in a weathered or exterior location, caulk the part of the hood that contacts the wall.

- **<u>Cover installation:</u>**
  1. Once the unit is installed and operating correctly, the covers can be installed.
  2. Hood screws may have to be removed and reinstalled to install covers properly.
  3. If the cover mounts to the side of the door bracket, pre-drill holes in the bracket to ease installation. A #21 drill size is recommended.
  4. If an operator or adjustor cover is provided, individual installation instructions are provided with each cover along with the necessary hardware to attach the cover.
  5. Once the cover is installed, operate the door a few more times to be sure there is no interference between the moving components inside the cover and the cover itself.
  6. If the door is mounted on the exterior of the building, a bead of silicone sealant should be applied around the entire perimeter of the cover, as it will provide additional protection to the door components.

Section 11 – Torque Specifications

Table 11.1 – Torque Recommendations for Guide Assembly and Wall Fasteners

Bolt size/type	Torque (ft lbs) [a]
1/4-20 Grade 2 steel bolt	6
5/16-18 Black Oxide Socket Cap	25
3/8-16 18-8 stainless steel bolt	20
3/8-16 Grade 2 steel bolt	20
3/8-16 Grade 5 steel bolt	31
1/2-13 Grade 5 steel bolt	75
1/2-13 Grade 8 steel bolt	107
5/8-11 Grade 8 steel bolt	212
3/4-10 Grade 8 steel bolt	376
[a] The recommended torque for steel bolts is based on a plated bolt that has not been lubricated.	

Table 11.2 - Torque Recommendations for Solid Masonry Wall Anchors

	Manufacturer/Torque (ft lbs)[a]	
Anchor Size (nominal)	Simpson Wedge-All	Hilti-Kwik Bolt 3
3/8	30	20
1/2	60	40
5/8	90	85
3/4	150	150
[a] Torque values for grout filled block are different, reference bolt manufacturer for these values.		

Section 12 – Maintenance Schedule

- **Maintenance Schedule:**
  Note: *If any of the following problems exist, **do not** operate the door until repaired.*

Component	What to look for and how often the components must be inspected:	Weekly	Monthly	Quarterly	What to do if problem exists:
Curtain & Bottom Bar	Are any curtain components damaged (slats, endlocks, etc.)?	X			Contact Service about replacing damaged parts.
	Is bottom bar damaged?	X			Contact Service about replacing damaged parts.
	Are bottom bar fasteners in place and properly tightened?		X		Fasteners must be inspected/replaced and properly tightened.
	Are fasteners attaching curtain to the barrel in place and properly tightened?		X		Fasteners must be inspected/replaced and properly tightened.
	Do you notice any hang-ups, jamming or other problems preventing the door from moving smoothly throughout the opening?	X			Check for external issues, if none exist, contact Service.
	Do you notice any odd or excessive noise when the door is operated?	X			Check for external issues, if none exist, contact Service.
	If there is a bottom seal, is it damaged?		X		Contact Service about replacing damaged parts.
	If there is locking, does it function properly?	X			Check for external issues, if none exist, contact Service.
Brackets	Are brackets plumb and perpendicular with wall?			X	Contact Service.
	Are bracket fasteners in place and properly tightened?			X	Fasteners must be inspected/replaced and properly tightened.
	Do you notice signs of excessive wear on the bearings (i.e. binding, excessive noise, etc.)?		X		If there is a grease fitting, apply grease, if not, contact Service.
	Is adjusting wheel & pin secure?			X	Contact Service.
	Is drive chain sufficiently lubricated?			X	Apply chain lube.
	Is drive chain in need of tightening?			X	Contact Service for instructions on how to tension the chain.
	Is drive or driven sprocket damaged?		X		Contact Service about replacing damaged parts.
Guides	Are wall fasteners in place and properly tightened?		X		Fasteners must be inspected/replaced and properly tightened.
	Are guide assembly fasteners in place and properly tightened?		X		Fasteners must be inspected/replaced and properly tightened.
	Is guide gap dimension correct?		X		Check job construction drawings and adjust gap as required. If job construction drawings are not available, contact Service.
	Are any of the guide parts bent or damaged?		X		Contact Service.
	Are stoppers loose, damaged, or missing?		X		Stoppers must be inspected/replaced and properly tightened.
Hood and Fascia	Is hood/fascia dented or damaged?			X	Remove hood/fascia. Repair if possible. If not leave hood/fascia off and contact Service.
	Is curtain rubbing against the hood/fascia?	X			Hood/fascia may have been damaged. Contact Service.
	Is hood/fascia level?			X	Check fasteners, they may be loose or missing. Replace as soon as possible.

Section 12 – Maintenance Schedule

	Are guide assembly fasteners in place and properly tightened?		X		Fasteners must be inspected/replaced and properly tightened.
	Is hood support level?			X	Check fasteners, they may be loose or missing. Replace as soon as possible.
Door operation	Does the door require excessive force to open?		X		Check for hang-ups or obstructions. Ensure spring tension is set correctly. Contact Service.
	If the door contains locking, does the locking mechanism function properly and securely hold the door in the closed position?		X		Check for damage and other external issues. Contact Service.
	If there is a sensing edge, does it function properly?	X			Cut power and check for loose wires. Contact Service for further instruction.
Motor Operator	Are the fasteners attaching the motor-to-the mounting bracket, and mounting bracket-to-the door bracket secure?			X	Fasteners must be inspected/replaced and properly tightened. Contact Service for replacement hardware.
	Are the sprockets properly aligned?			X	Realign the sprockets as secure using the set screws. Recheck chain tension.
	Are the sprocket keys properly aligned with sprockets and securely fastened with the set screws?			X	Reposition the keys so they fully engage the keyway in the sprocket. Tighten the set screws.
	Is the door stopping correctly at the open (before bottom bar contacts the stoppers) and closed (as soon as the bottom bar contacts the floor) positions?		X		Limits may have to be adjusted in the motor operator. Refer to the operator owner's manual or contact Service.
	Is the operator functioning normally?		X		Refer to the *Operator Troubleshooting Table* on the following page to diagnose the problem.

- **Operator Troubleshooting:**
  Note*: If you suspect you are having an issue with your operator, use the following table to determine the potential causes. If the provided solution does not eliminate the issue, or the table does not address your particular problem, contact the Service Department.*

Component	Problem	Potential Cause	Solution
Motor Operator	Motor Operator does not run when OPEN or CLOSE button is pushed	The circuit breaker may be flipped or fuse blown.	Reset breaker or replace fuse. Contact Service if replacement fuse is needed.
		The thermal overload may be tripped.	Reset thermal overload.
		Manual interlock switch is open (on units with emergency operator).	Close manual interlocks.
		External interlock may be opened.	Close external interlock.
	Motor operator runs but the door does not move	Sprocket key may be missing or drive chain may be broken.	Contact Service for repair parts. Install key or replace chain.
		Clutch may be slipping.	Adjust if possible. Contact Service otherwise.
	Motor hums but does not run	Door or drive chain may be jamming.	Check for hang-ups or obstructions. Try to operate manually. If issue persists, contact Service.
		Dead phase in 3 phase system.	Check power supply.
		Brake does not release.	Check power to brake solenoid.
		Open motor winding.	Check that all connections are secure.
	Motor operator runs in wrong direction and limits do not function	3 phase operator power supply is out of phase.	Interchange any 2 power leads to unit.
	Door drifts when motor shuts off	Brake may be improperly adjusted or broken.	Check brake components. Contact Service for replacement parts or adjust instructions.
	Motor operator does not shut off at full OPEN or at full CLOSE position	Limits may need adjustment.	Refer to the operator owner's manual to readjust limits.
		Sprocket on limit shaft may be slipping or limit drive chain may be broken.	Ensure sprocket key is correctly installed and set screws are tightened. Contact Service for replacement chain if broken.
		Limit switch may be defective.	Contact Service.
Limit Switches	Limit switch does not hold setting	Drive chain may be too loose, allowing the chain to jump sprocket teeth.	Adjust chain to proper tension. Contact Service for additional information.
		Limit nut retainer not engaging slots in limit nuts.	Be sure retainer is securely engaged in slots of both limit nuts.
		Limit nuts binding on screw threads, allowing them to jump position on retainer.	Lube screw thread. Check that limit nuts turn freely.

Appendix A – Chain Sprocket Adjustor

- **Chain Sprocket Adjustor:**
  1. Loosen the shaft collar set screws. Remove the shaft collar and support strap from the adjusting wheel stud.
  2. Place the bracket plate onto the inner shaft.
  3. After the shaft sprocket is on the inner shaft, remove the 3/4”-10 x 1-1/2" bolts.
  4. Install the square key into the shaft sprocket and inner shaft key seat.
  5. Align the shaft sprocket with the sprocket on the adjusting wheel.
  6. Tighten the set screws on the shaft sprocket to secure it to the inner shaft.
  7. Place the support strap onto the adjusting wheel stud and over the inner shaft. Be sure that the washers are between the support strap and the adjusting wheel.
  8. Replace the shaft collar on the adjusting wheel stud and tighten the set screws. When replacing shaft collar, allow clearance (.030") so that the adjusting wheel can rotate freely.

Figure A.1 – Chain Sprocket Adjustor Assembly

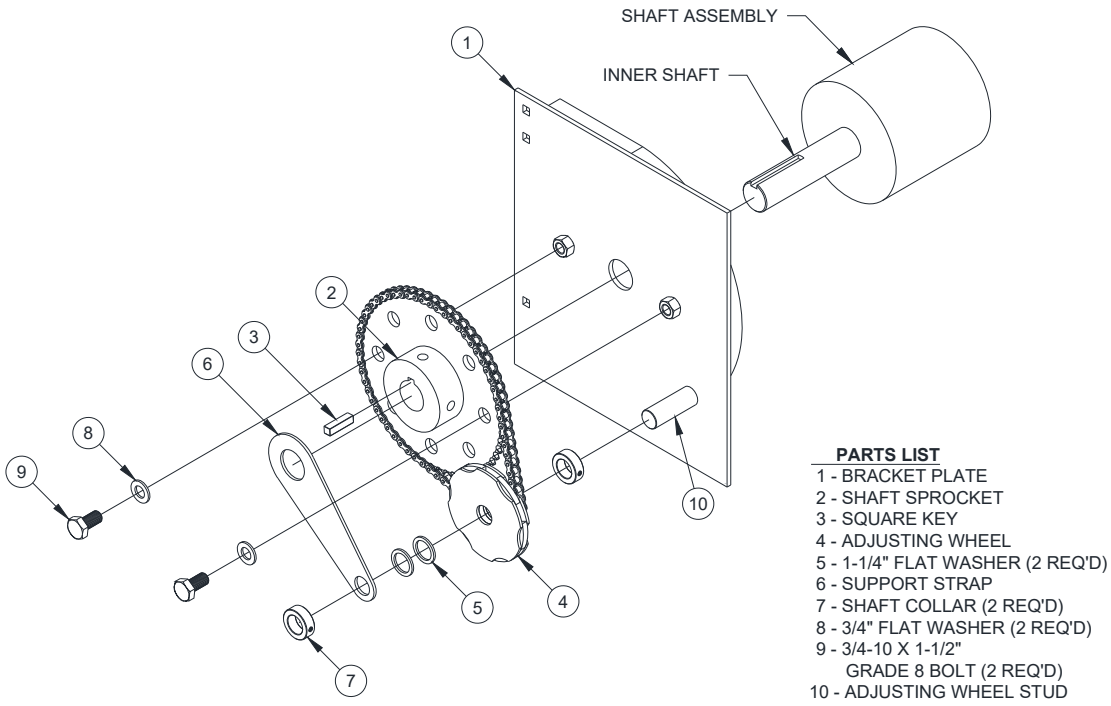

WARNING

Apply tension with door in the fully open position only. Do not operate door from the fully open position without first installing both 3/4”-10 x 1-1/2" grade 8 bolts. Roller chain is not intended to hold extreme loads and could break causing property damage and serious injury or death.

9. To apply spring turns, be sure the 3/4-10 x 1-1/2" grade 8 bolts are removed from the shaft sprocket.
10. Use a 1-1/8" high x 3/8" thick x 40" long ASTM A36 minimum bar to apply spring torque. See the job construction drawing (elevation view) for the number of initial spring turns to apply to the small adjusting wheel and the direction of rotation.
11. After the correct quantity of spring turns has been applied, use the 3/4”-10 x 1-1/2" Grade 8 bolts to fasten the shaft sprocket to the bracket plate. Torque bolts to 365 - 375 ft-lbs.

Appendix B – Vinyl Guide Weather Seal

- **Guide Weather Seal Installation Instructions**

NOTICE – A rubber mallet should be used to properly install the seal. DO NOT install the seal using a steel hammer. Use caution when installing the seal below freezing temperatures, as it may crack if handled or installed improperly. If possible store the seal above freezing temperatures until it is installed.

Figure B.1 – Guide Weather Seal

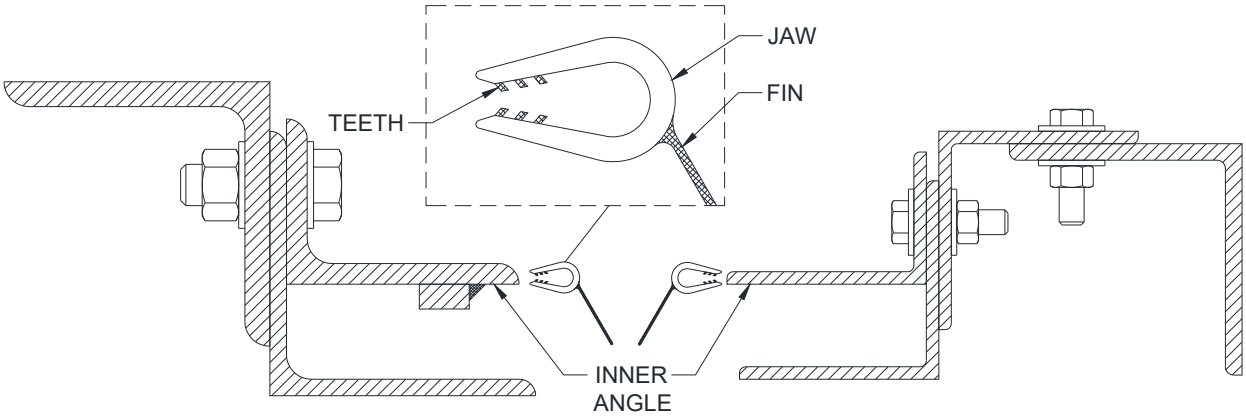

1. The seal should cover from the bottom of the bracket to the bottom of the guide. Check this by either measuring it or holding it up to the guide. If the seal does not cover from the ground to the bottom of the bracket, a spliced section is needed, proceed to step 2. If no splice is required proceed to step 3.

2. If a splice is required, a Craftsman Handi-Cut utility cutter is recommended or a pair of tin snips or other cutting device can be used to cut the seal. Trim the bottom of the upper piece at a 45 degree angle from the jaw through to the fin. Trim the top of the lower piece at a 45 degree angle from the fin and jaw. See adjacent figure for how to trim the seal. Tape or other adhesive can be used to join the spliced weather seal, if desired.

Figure B.2 – Weather Seal Splice

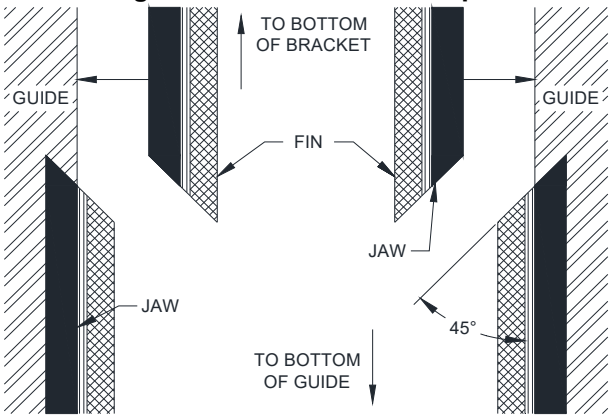

3. Start at the top of the guide and work downward. Be sure that the seal is fully seated on the angle.

   *****NOTE -** Starting at the bottom may be difficult, as the flexibility of the material will cause it to pull away from the guide as it is being installed.*

4. Run the door up and down a few times to ensure that the seal is installed properly.